GENERAC | MAGNUM

MDG150DF4

Diesel Generator

Parts Manual

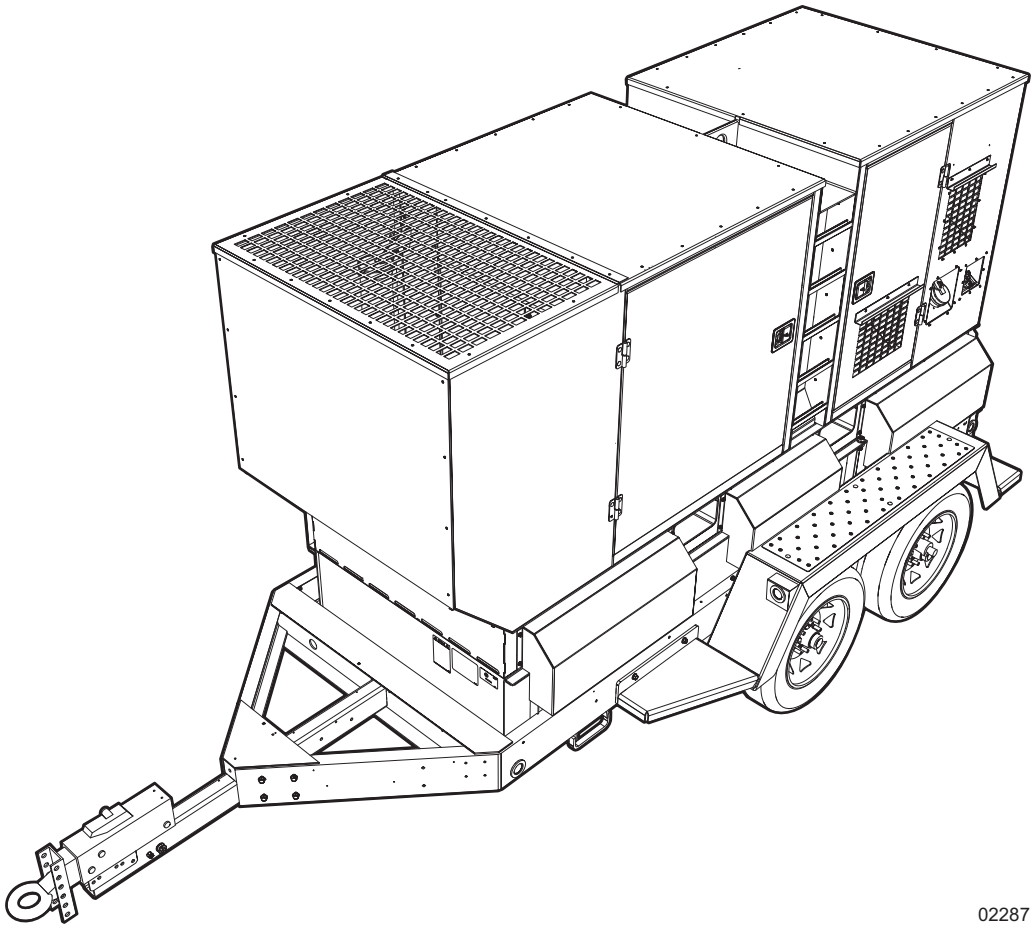

02287

MODEL NUMBER: _____

SERIAL NUMBER: _____

DATE PURCHASED:_____

SAVE THIS MANUAL FOR FUTURE REFERENCE

⚠WARNING

California Proposition 65. Engine exhaust and some of its constituents are known to the state of California to cause cancer, birth defects, and other reproductive harm.

(000004)

⚠WARNING

California Proposition 65. This product contains or emits chemicals known to the state of California to cause cancer, birth defects, and other reproductive harm.

(000005)

⚠WARNING

Environmental Hazard. Always recycle batteries at an official recycling center in accordance with all local laws and regulations. Failure to do so could result in environmental damage, death or serious injury.

(000228)

Introduction

This parts manual was prepared based on the information available at the time of publication and is subject to change without notice. Generac Mobile Products reserves the right to change parts at any time. To check whether a revised parts manual is available, contact Generac Mobile Products.

DO NOT MODIFY or use this equipment for any application other than which it was designed for. To keep your equipment fully operational, it is suggested you maintain a stock of commonly used maintenance or service parts. A recommended spare parts list can be found in the back of this manual. To order service parts, please go to **www.generacmobilepoducts.com** or call Generac Mobile Products.

⚠ WARNING

Before operating or servicing this equipment, read and understand the Generac Mobile Products Operating Manual which was included with the unit when shipped from the factory. Failure to do so increases the risk of injury to yourself or others.

GENERAC MOBILE PRODUCTS LLC

215 Power Drive • Berlin, WI 54923 U.S.A.
Phone: 920-361-4442
FAX: 920-361-4416
Toll Free: 1-800-926-9768
www.generacmobileproducts.com

For technical or parts QUESTIONS, please contact the Generac Mobile Products Technical Service team at 1-800-926-9768.

Engine Make:_____
Engine Serial Number:_____
Engine Model Number: _____
Generator Make: _____
Generator Model Number:_____
Generator Serial Number: _____
Unit Model Number:_____
Unit Serial Number: _____

This Page Intentionally Left Blank

Table of Contents

Introduction iii
- Parts Manual Instructions 1
- Enclosure Panels 2
- Unit Decals - Exterior 4
- Unit Decals - Interior 6
- Unit Decals - Control Panel 8
- Unit Decals - Power Panel 10
- Roof and Doors to Unit 12
- Enclosure Frame Assembly 14
- Front Enclosure Assembly 16
- Door Assembly - Controls - Top and Bottom 18
- Door Assembly - Rear Left 20
- Door Assembly - Rear 22
- Engine Bay Door Assembly - Left 24
- Engine Bay Door Assembly - Right 26
- Fuel Panel Assembly 28
- Receptacle / E-stop Panel Assembly 30
- Receptacle Panel Assembly 32
- Control Box Door Assembly 34
- Control Panel Assembly (2 of 2) 36
- Control Panel Assembly (1 of 2) 38
- Breaker/Lug Box Assembly 40
- Breaker and Lug Assembly 42
- Air Filter Assembly 44
- Cooling System Assembly 46
- Cooling System Hoses 48
- Lift Structure 50
- Engine and Generator To Unit 52
- Engine Block Heater (Optional) 54
- Engine Assembly 56
- Generator Assembly 58
- Exhaust & After Treatment Assembly 60
- Exhaust & DEF Assembly 62
- Skid And Fuel Tank Assembly 64
- Trailer Assembly 66
- Axle Assembly 68
- Brake Line Assembly 70
- Recommended Spare Parts List 72

This Page Intentionally Left Blank

Parts Manual Instructions

Product illustrations are only representations. Products supplied may vary from the illustrations in this parts manual. Parts not shown in the illustration are indicated by a double dash (--) in the item column.

Please be prepared to provide the following information when ordering replacement parts: model number, serial number (on unit serial tag), part number, purchase order number (if applicable), shipping address, shipping method.

Refer to the illustration below to locate the unit ID tag and Vehicle Identification Number (VIN) tag on the unit. Important information, such as the unit serial number, model number, VIN and tire loading information are found on these tags. Record the information from these tags so it is available if the tags are lost or damaged. When ordering parts or requesting assistance, you may be asked to provide this information.

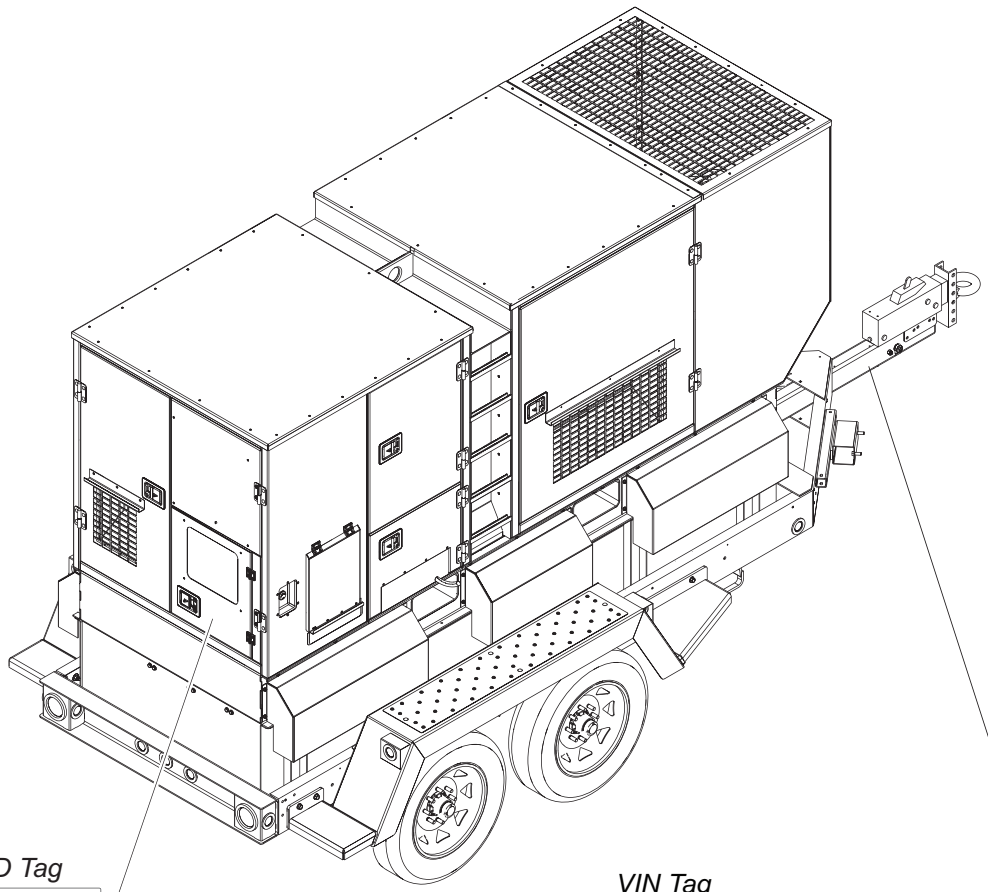

UNIT ID Tag

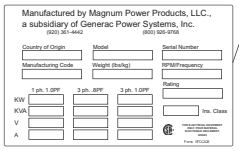

Located on control panel (behind door)

VIN Tag

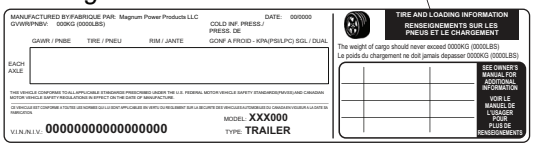

02288

ENCLOSURE PANELS

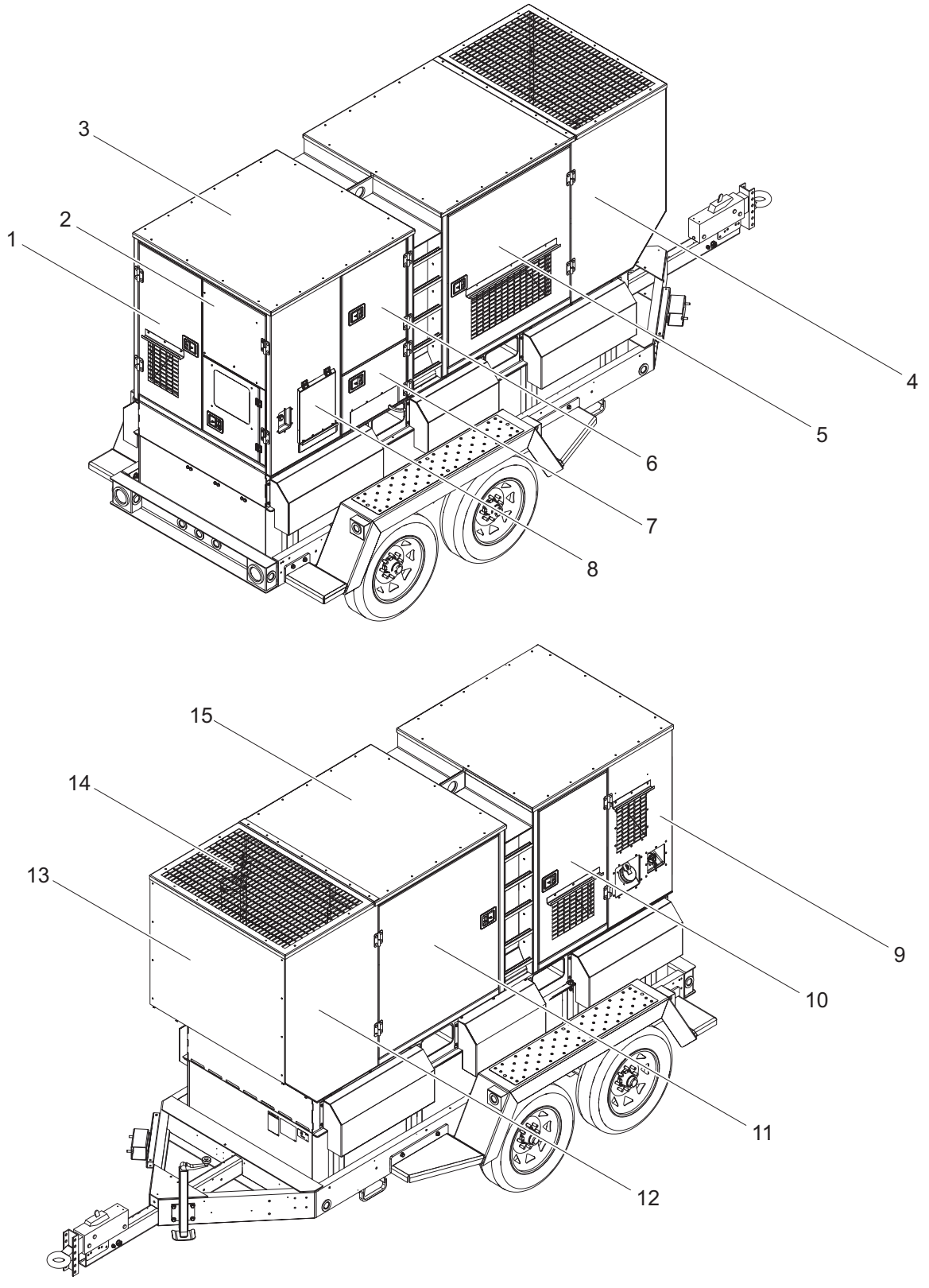

Item	Part No.	Qty	Description	Notes
1	54908	1	Assembly, rear door	
2	55025	1	Assembly, control door	
3	54920	1	Panel, top plate - back	
4	54911	1	Assembly, front panel - CS	
5	54906	1	Assembly, front door - CS	
6	54023	1	Assembly, control door - top	
7	54025	1	Assembly, control door - bottom	
8	53979	1	Assembly, e-stop panel	
9	53413	1	Assembly, rear panel - LH	
10	54903	1	Assembly, rear door - DS	
11	54904	1	Assembly, front door - DS	
12	54905	1	Assembly, front panel - DS	
13	52378	1	Assembly, front panel	
14	53691	1	Panel, roof - fwd	
15	54919	1	Panel, top cover - front	

UNIT DECALS - EXTERIOR

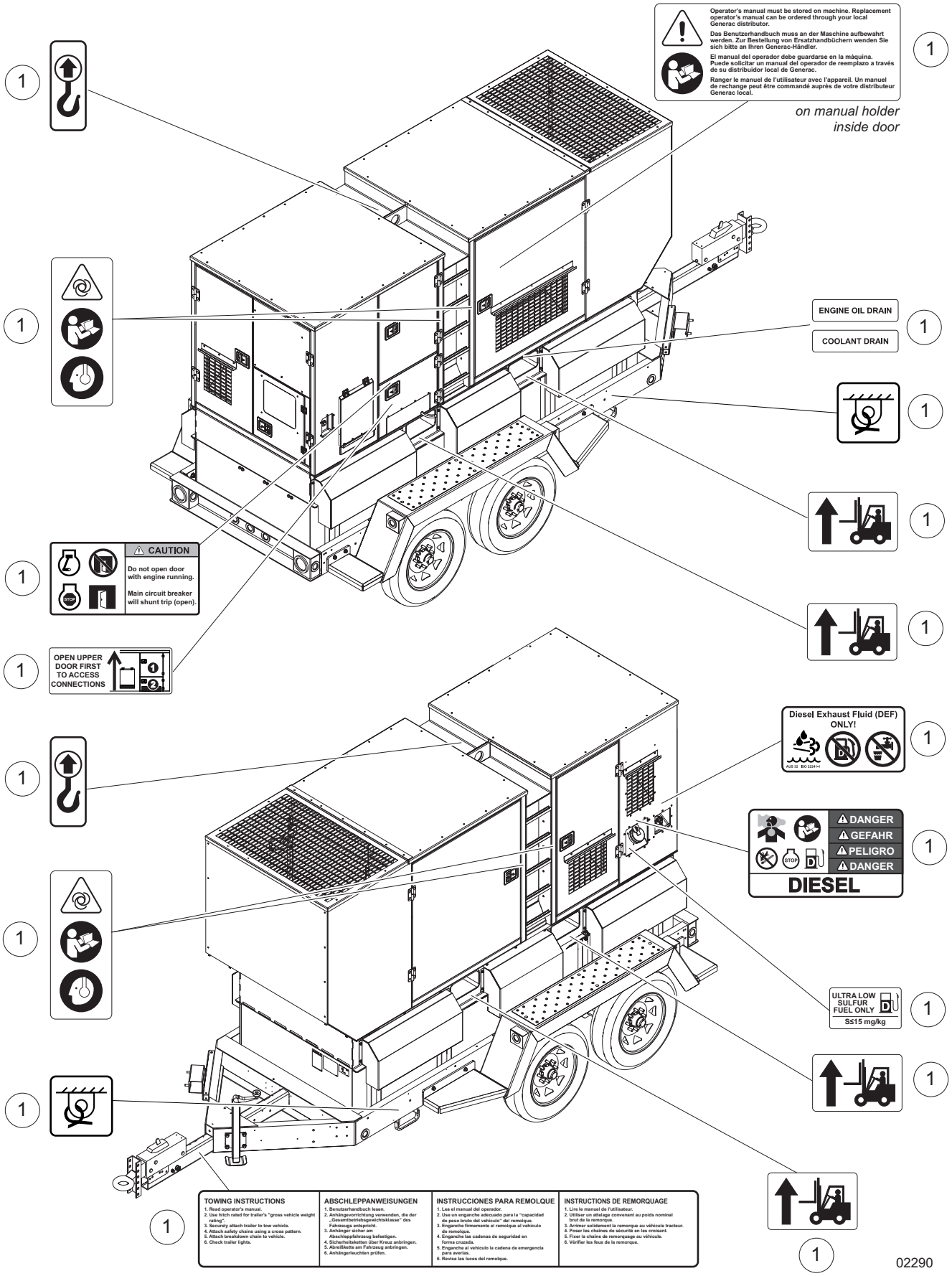

Item	Part No.	Qty	Description	Notes
1	51551	1	Decal Set, safety	

UNIT DECALS - INTERIOR

.

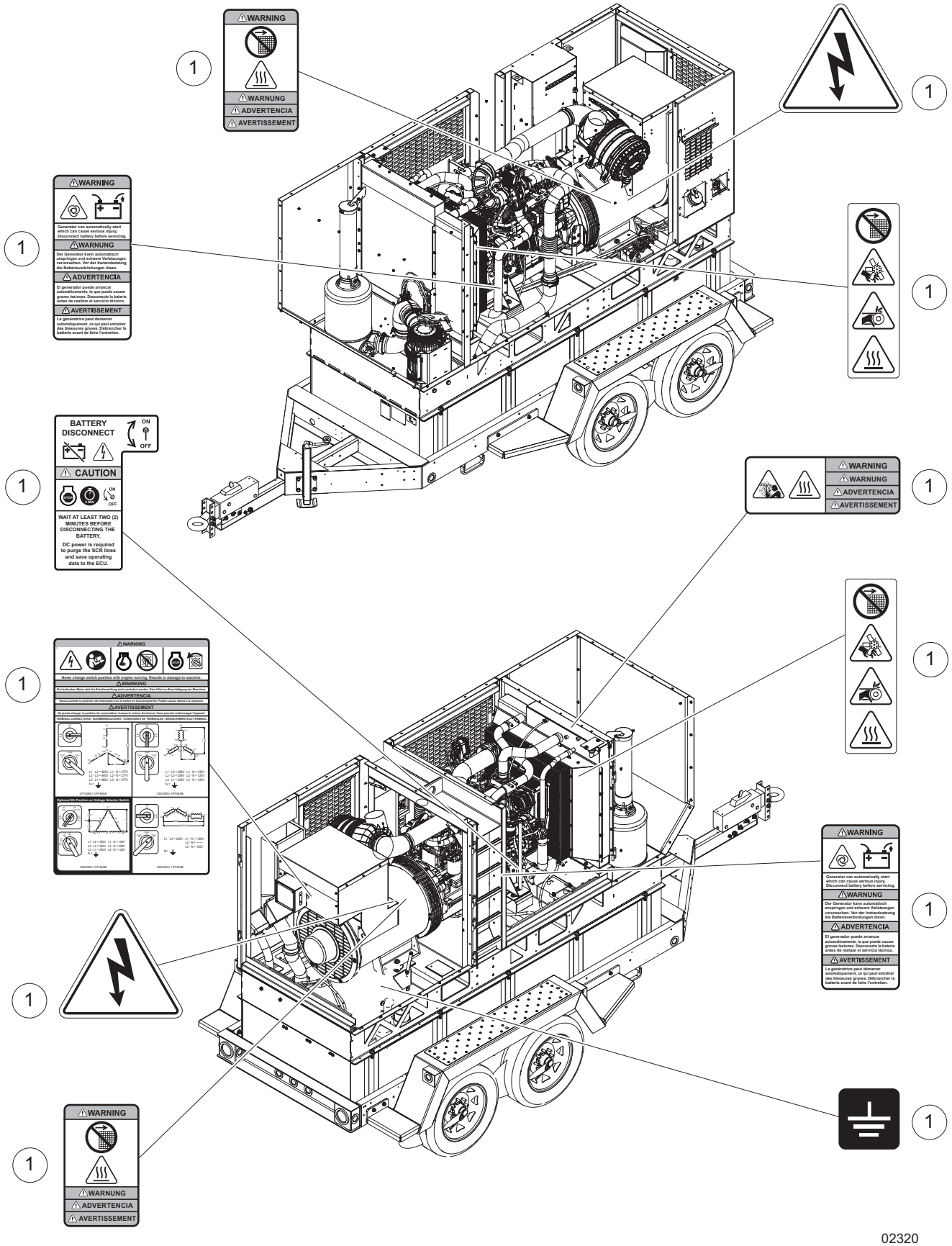

02320

Item	Part No.	Qty	Description	Notes
1	51551	1	Decal Set, safety	

UNIT DECALS - CONTROL PANEL

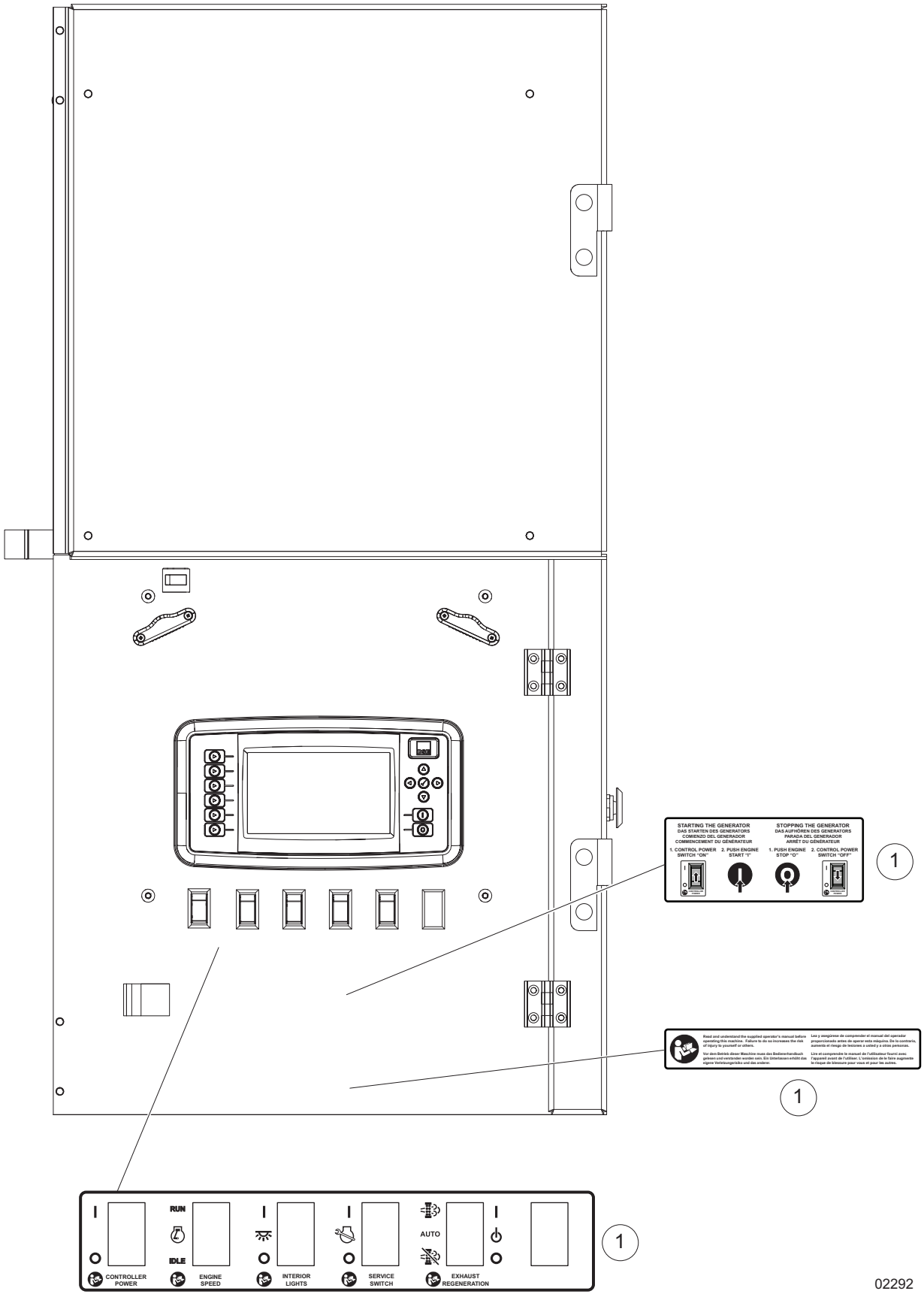

Item	Part No.	Qty	Description	Notes
1	51550	1	Decal Set, controls	

UNIT DECALS - POWER PANEL

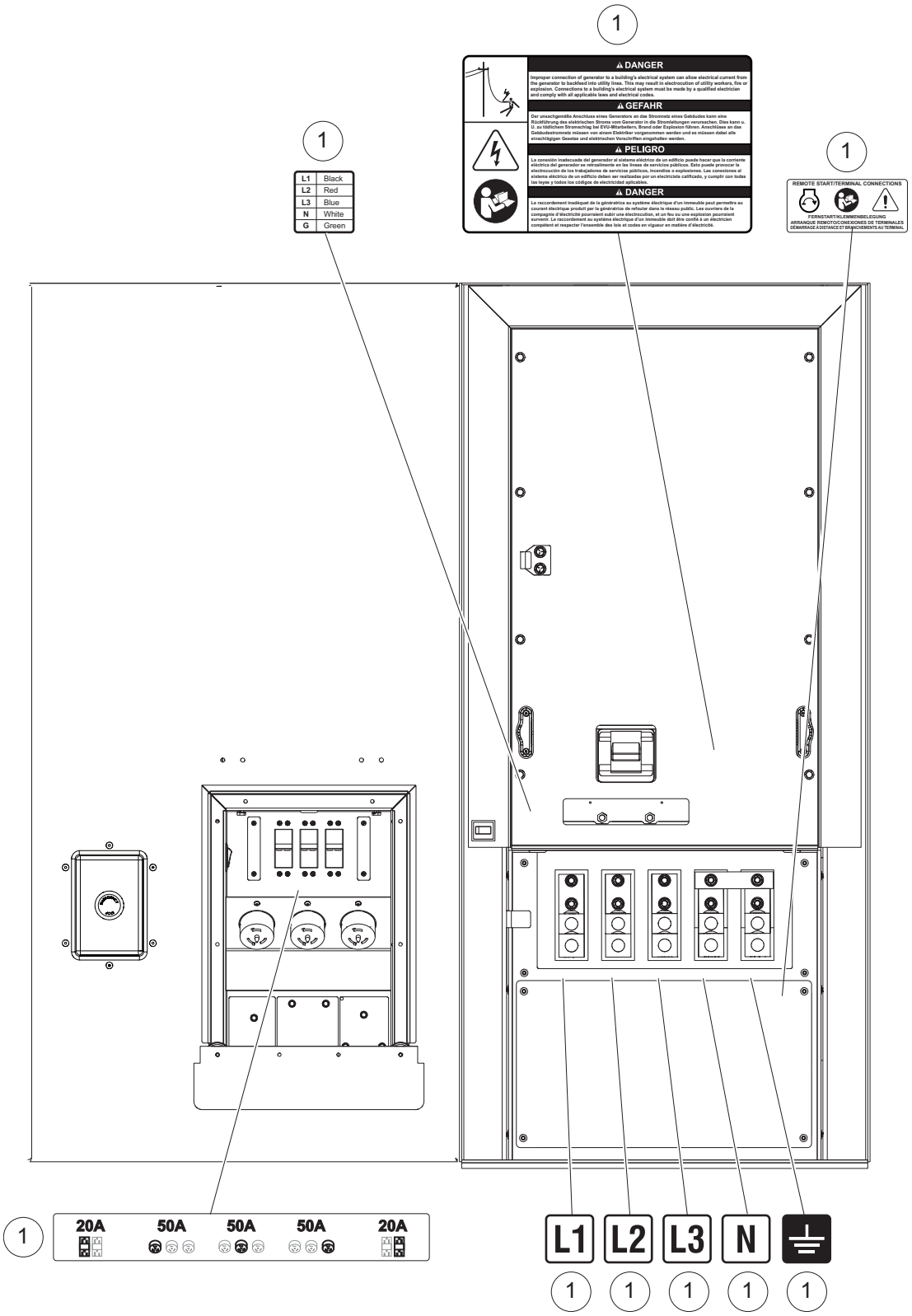

02329

Item	Part No.	Qty	Description	Notes
1	51551	1	Decal Set, safety	

ROOF AND DOORS TO UNIT

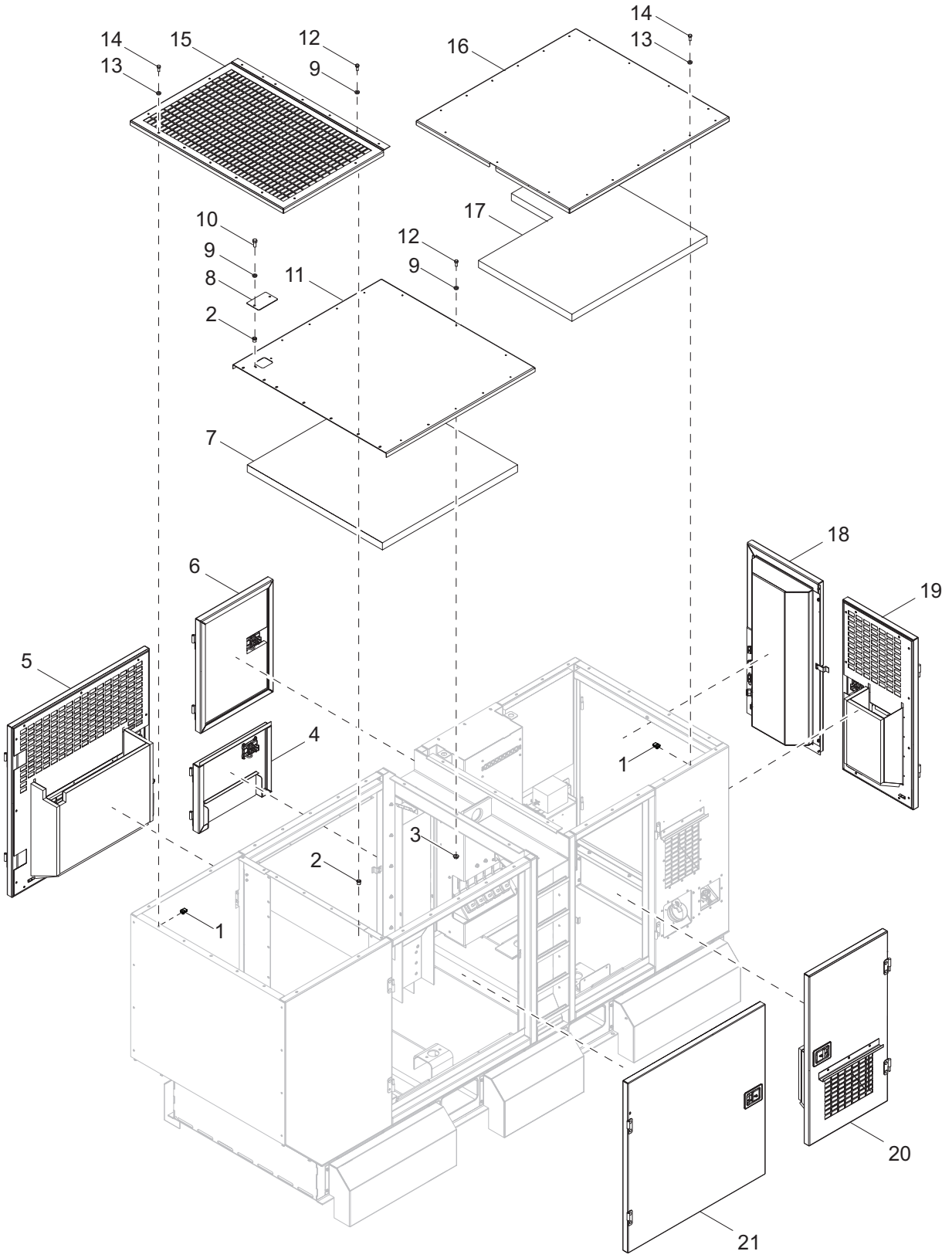

Item	Part No.	Qty	Description	Notes
1	15424	35	Nut, .250-20 cage, G5	
2	62133	9	Insert, threaded .312-18 splined .027-.150 grip	
3	60161	6	Nut, .250-20 sflg, G5	
4	54025	1	Assembly, controls door - bottom	
5	54906	1	Assembly, front door - right	
6	54023	1	Assembly, controls door - top	
7	54844	1	Foam, top front	
8	11096	1	Panel, radiator access	
9	60452	12	Washer, .312 flat 1.125/1.00 bonded rubber - SS	
10	60687	2	Screw, .312-18 x .750 std hex- SS	
11	54919	1	Panel, top cover - front	
12	60507	12	Screw, .312-18 x 1.00 std hex - SS	
13	69968	35	Washer, sealing .26ID x .50OD - neoprene	
14	61195	35	Screw, .250-20 x .750 std hex - SS	
15	53691	1	Panel, roof - forward	
16	54920	1	Panel, top plate - back	
17	54843	1	Foam, top back	
18	55025	1	Assembly, controls door	
19	54908	1	Assembly, rear door - left	
20	54903	1	Assembly, front panel - left	
21	54904	1	Assembly, front door - left	

ENCLOSURE FRAME ASSEMBLY

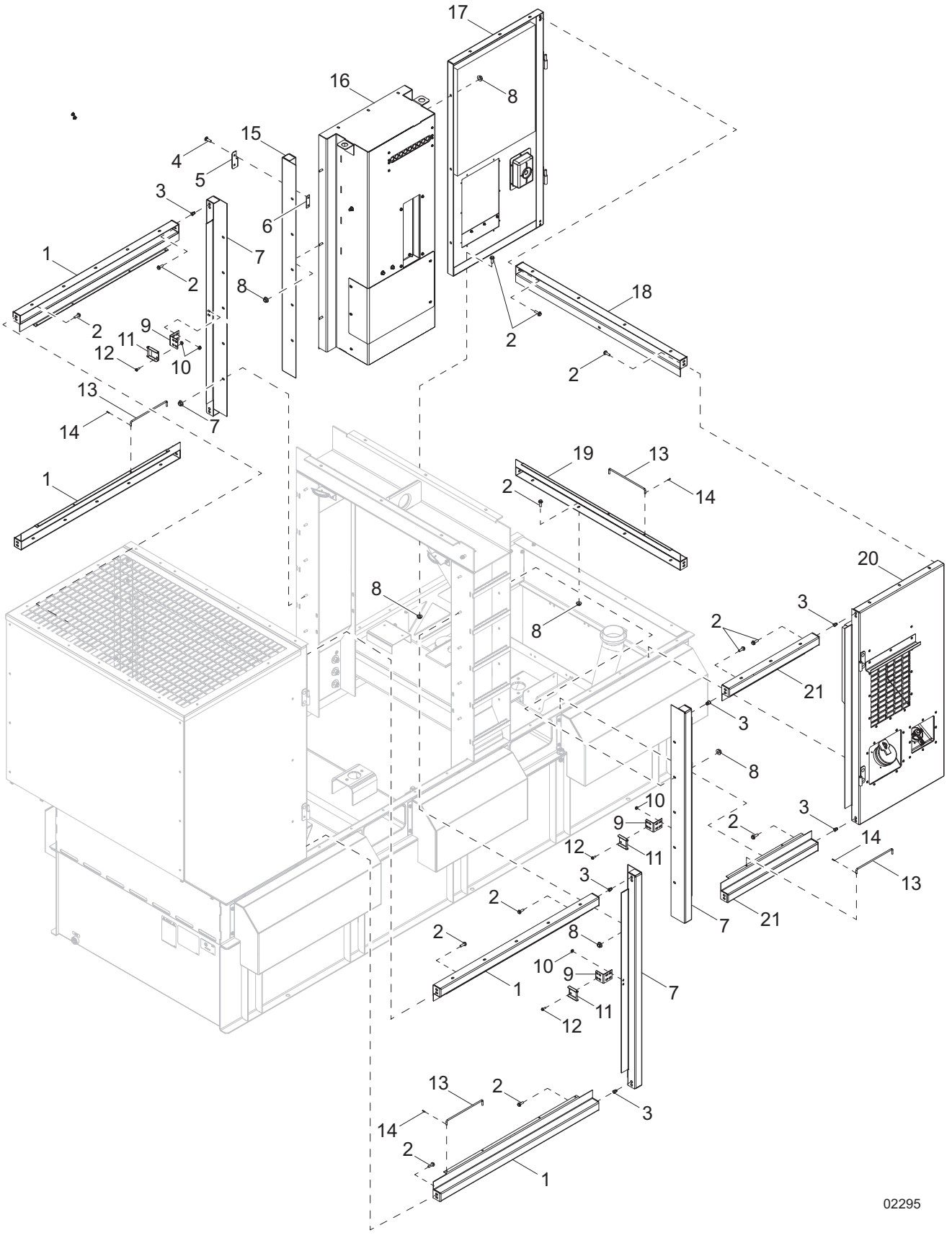

Item	Part No.	Qty	Description	Notes
1	54892W	4	Support, top - long	
2	60616	58	Screw, .312-18 x 1.25 sflg hex	
3	63097	16	Insert, threaded .312-18 hex .027-.150 grip	
4	63346	8	Screw, .312-18 x 1.00 Scytrx- SS	
5	18460B	4	Hinge, left (female)	
6	10000011935	4	Plate, hinge back - threaded	
7	54890W	3	Panel, door frame - small	
8	60095	26	Nut, .312-18 sflg	
9	10000013491	3	Striker, side angle	
10	60161	14	Nut, .250-20 sflg, G5	
11	10000013494	3	Weldment, striker	
12	60175	6	Screw, .250-20 x .500 sflg hex, G5	
13	18900	4	Rod, door prop	
14	60048	4	Pin, roll .125 x .625	
15	54928W	1	Panel, power distribution - door mount	
16	54029	1	Panel, power distribution	
17	53979	1	Assembly, receptacle/e-stop panel	
18	54934W	1	Support, cross panel top - back	
19	54893W	1	Support, bottom - back	
20	53413	1	Assembly, rear panel - LH	
21	54891W	2	Support, top - short	

FRONT ENCLOSURE ASSEMBLY

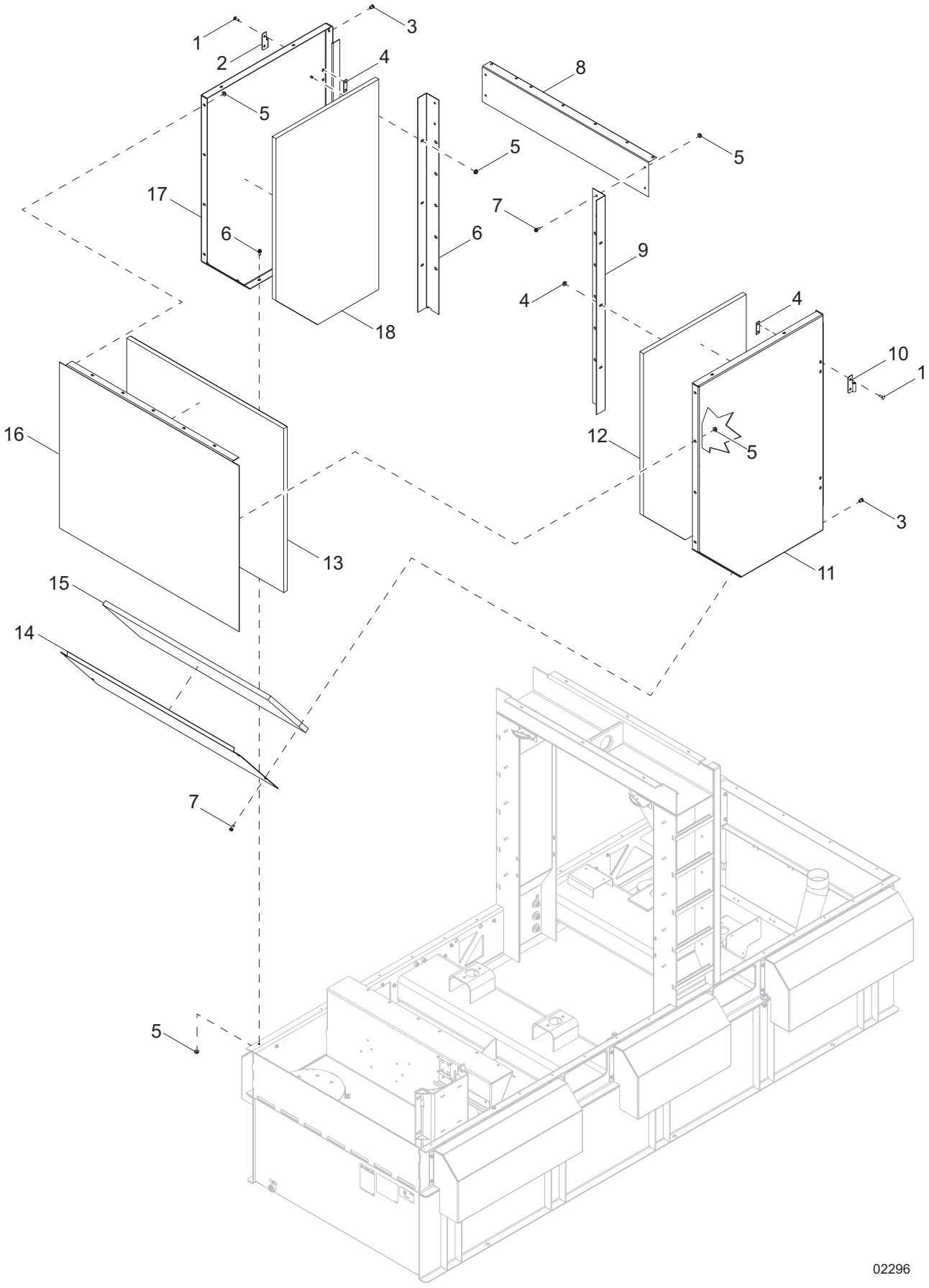

Item	Part No.	Qty	Description	Notes
1	63346	8	Screw, .312-18 x 1.00 Scytrx - SS	
2	18460B	2	Hinge, left (female)	
3	63097	8	Insert, threaded .312-18 hex .027-.150 grip	
4	36672	4	Plate, hinge back - threaded	
5	60095	27	Nut, .312-18 sflg hex	
6	54923B	1	Bulkhead, curbside	
7	60616	12	Screw, .312 x .750 sflg hex, G5	
8	53576B	1	Panel, upper bulkhead	
9	54909B	1	Bulkhead, drivers side	
10	18462B	2	Hinge, right (female)	
11	54889W	1	Panel, front - left	
12	54836	1	Foam, front panel - left	
13	52379	1	Foam, forward access	
14	54685W	1	Panel, forward access	
15	52384	1	Foam, front panel	
16	54679W	1	Panel, front	
17	54887W	1	Panel, front - right	
18	52399	1	Foam, front right	

DOOR ASSEMBLY - CONTROLS - TOP AND BOTTOM

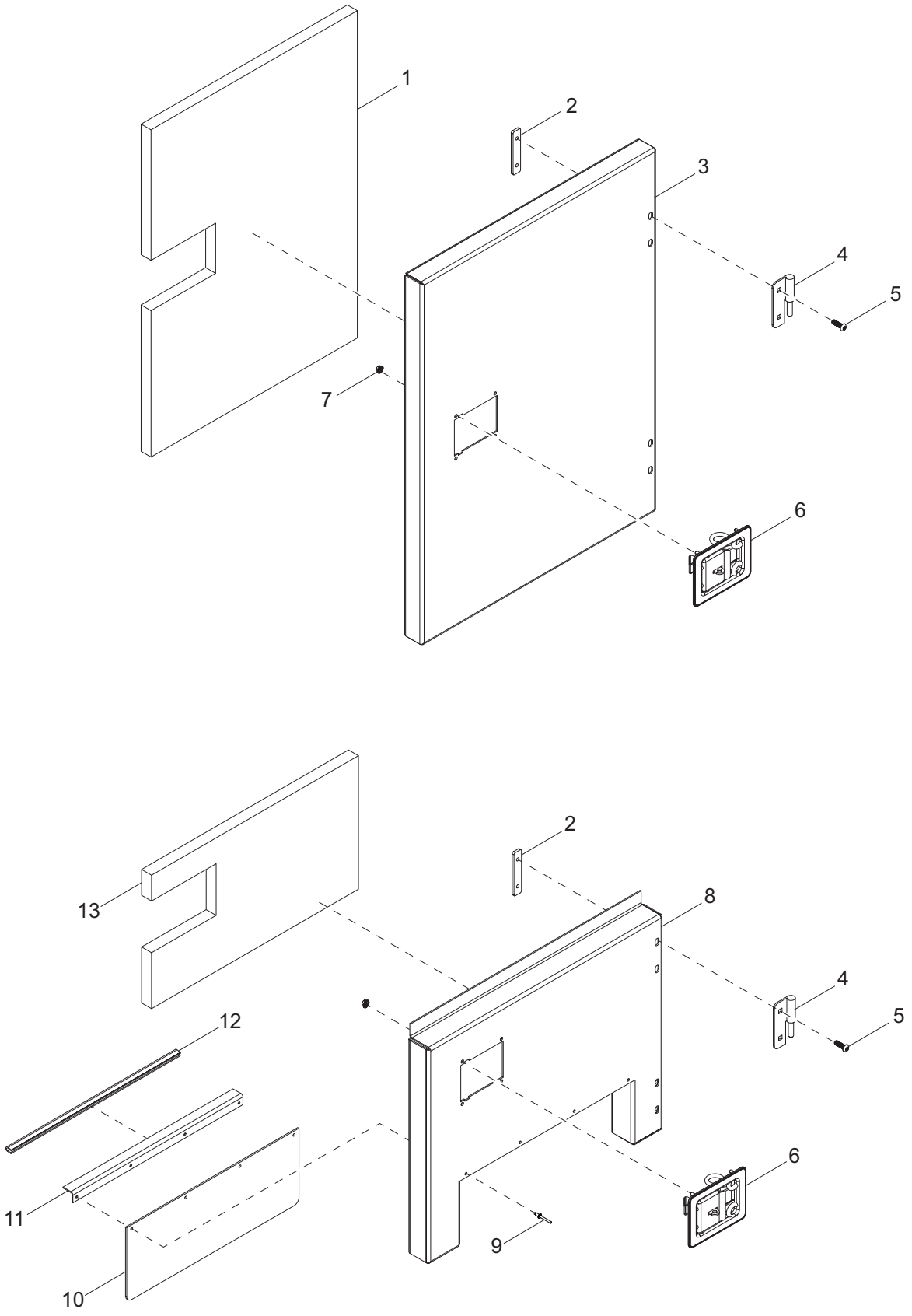

02340

DOOR ASSEMBLY - CONTROLS - TOP AND BOTTOM

Item	Part No.	Qty	Description	Notes
1	54831	1	Foam, controls door	
2	10000011935	4	Plate, hinge back - threaded	
3	54024W	1	Door, controls - top	
4	18461B	4	Hinge, left - male	
5	63346	8	Screw, .312-18 x 1.00 Scytrx - SS	
6	54777	2	Latch, paddle slam - black	
7	60036	8	Nut, M6-1.00 sflg, G8.8	
8	54026W	1	Door, controls - bottom	
9	60268	4	Rivet, .188 dia x .126 to .250 grip	
10	54027	1	Flap	
11	54028	1	Bracket, door flap	
12	56326	1	Guard, edge	
13	54842	1	Foam, lower control door	

DOOR ASSEMBLY - REAR LEFT

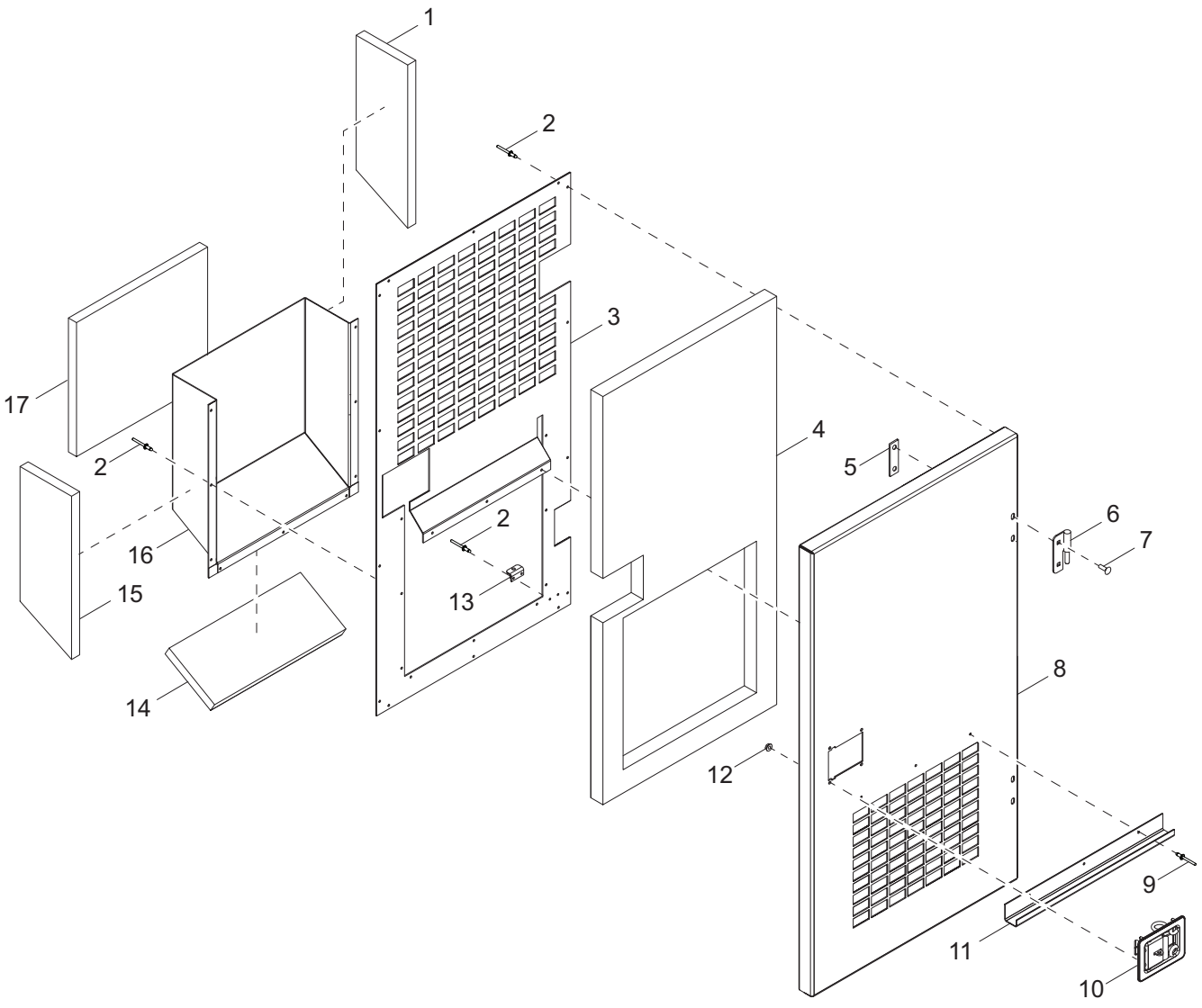

Item	Part No.	Qty	Description	Notes
1	54834	1	Foam, vent panel - LH	
2	60268	25	Rivet, .188 dia x .126 to .250 grip	
3	54729B	1	Panel, door inside	
4	54731	1	Foam, door	
5	36672	2	Plate, hinge back - threaded	
6	18461B	2	Hinge, left - male	
7	63346	4	Screw, .312-18 x 1.00 Scytrx - SS	
8	54902W	1	Panel, rear door - LH	
9	60260	3	Rivet, .188 dia x .375 to .50 grip - SS	
10	54777	1	Latch, paddle slam - black	
11	54767W	1	Gutter, rain LH door	
12	60036	4	Nut, M6-1.00 sflg, G8.8	
13	20916	1	Bracket, prop rod	
14	54835	1	Foam, vent panel - bottom	
15	54833	1	Foam, vent panel - RH	
16	54730W	1	Panel, door vent	
17	54832	1	Foam, vent panel - top	

DOOR ASSEMBLY - REAR

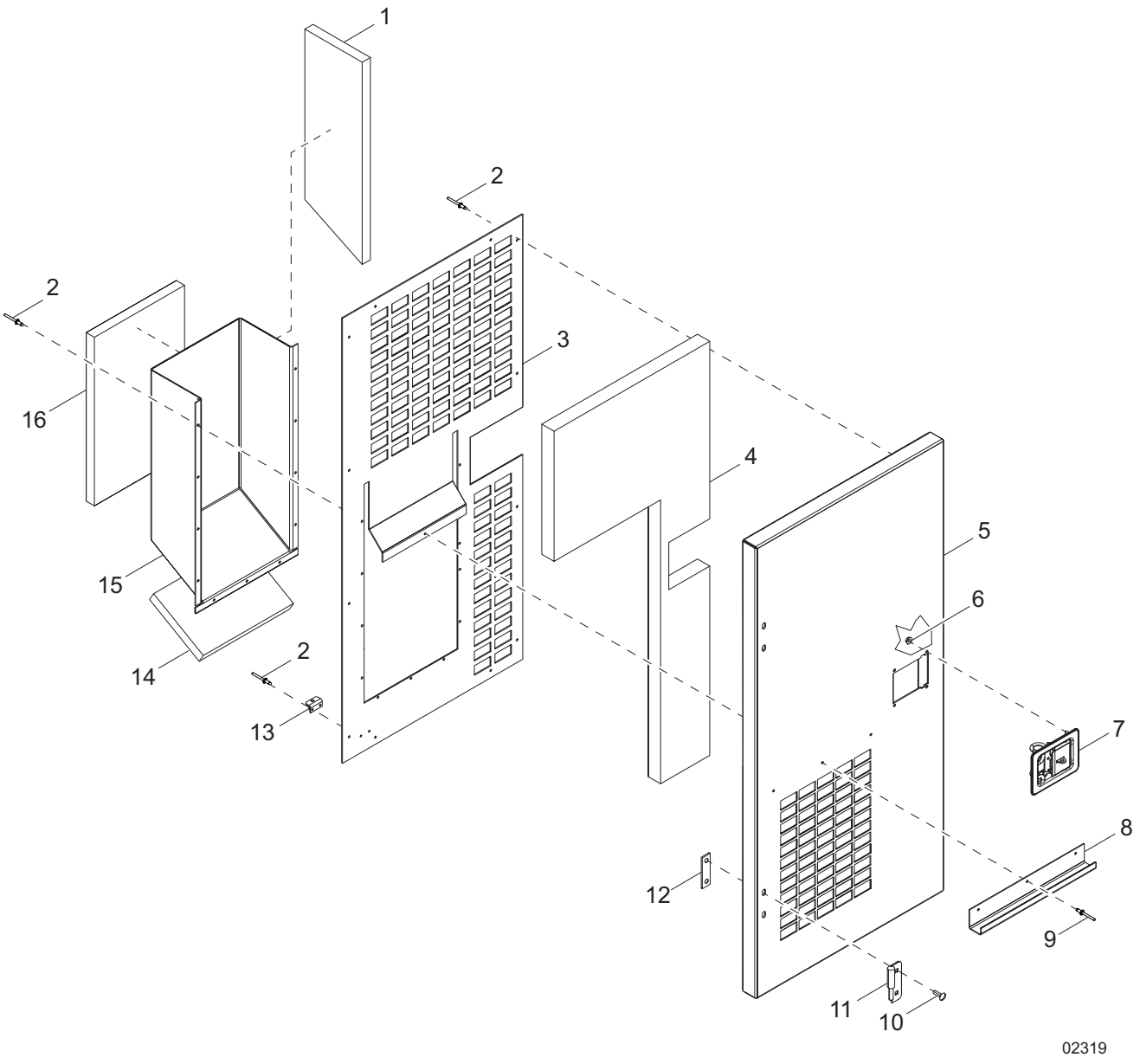

Item	Part No.	Qty	Description	Notes
1	54851	1	Foam, rear door - LH	
2	60268	25	Rivet, .188 dia x .126 to .250 grip	
3	54187	1	Panel, inner door	
4	53410	1	Foam, rear door	
5	54907W	1	Panel, rear door	
6	60036	4	Nut, M6-1.00 sflg, G8.8	
7	54777	1	Latch, paddle slam - black	
8	54768W	1	Gutter, rear door - rain	
9	60260	3	Rivet, .188 dia x .375 to .50 grip - SS	
10	63346	4	Screw, .312-18 x 1.00 Scytrx - SS	
11	18459B	2	Hinge, right - male	
12	36672	2	Plate, hinge back - threaded	
13	20916	1	Bracket, prop rod	
14	54853	1	Foam, rear door - bottom	
15	54732W	1	Panel, vent - rear door	
16	54850	1	Foam, rear door - back	

ENGINE BAY DOOR ASSEMBLY - LEFT

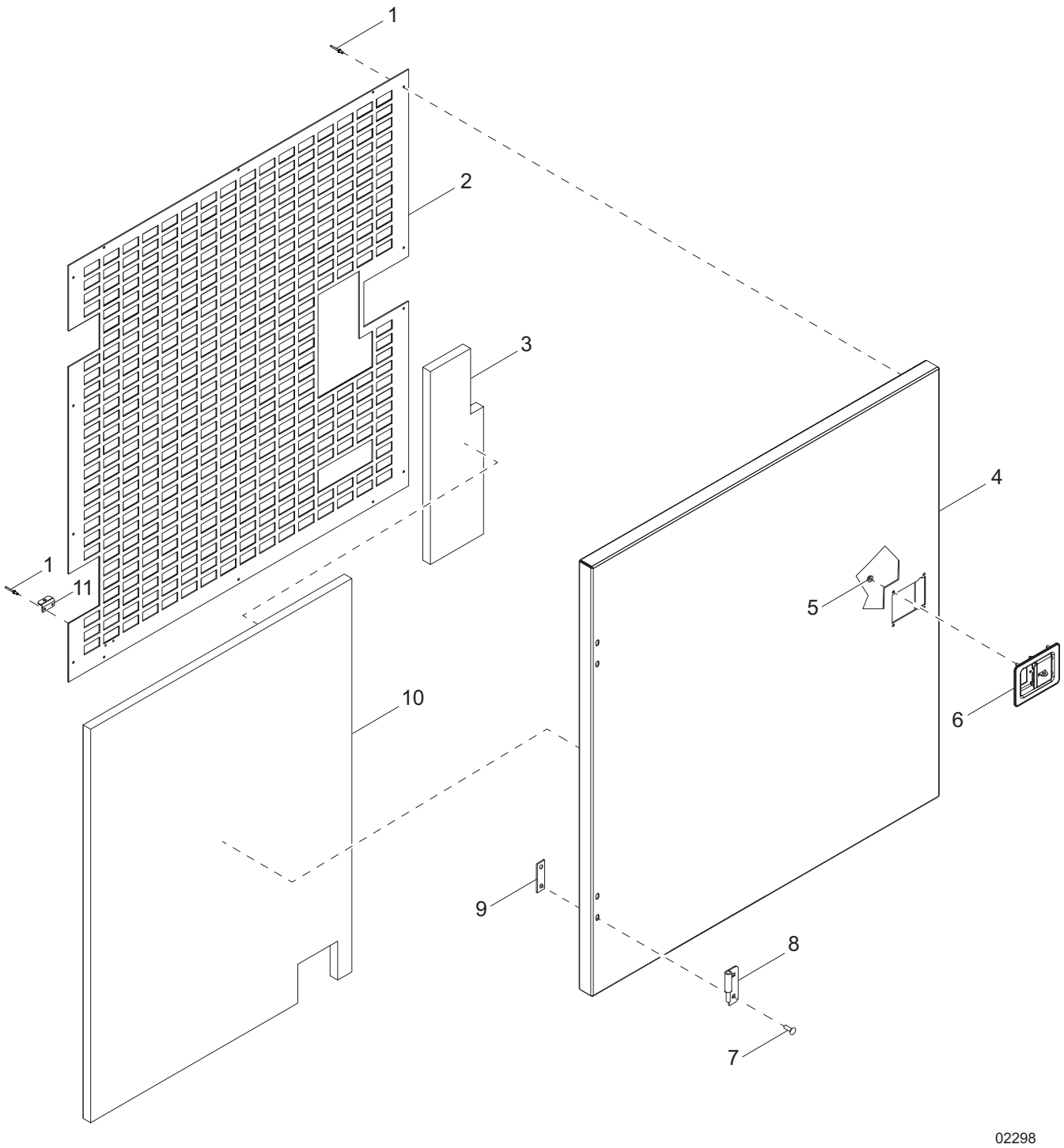

Item	Part No.	Qty	Description	Notes
1	60268	16	Rivet, .188 dia x .126 to .250 grip - SS	
2	54327B	1	Panel, door - inside	
3	52377	1	Foam	
4	54901W	1	Panel, front driver side door	
5	60036	4	Nut, M6-1.00 sflg, G8.8	
6	54777	1	Latch, paddle slam - black	
7	63346	4	Screw, .312-18 x 1.0 Scytrx - SS	
8	18459B	2	Hinge, right (female)	
9	36672	2	Plate, hinge back - threaded	
10	52376	1	Foam	
11	20916	1	Bracket, prop rod	

ENGINE BAY DOOR ASSEMBLY - RIGHT

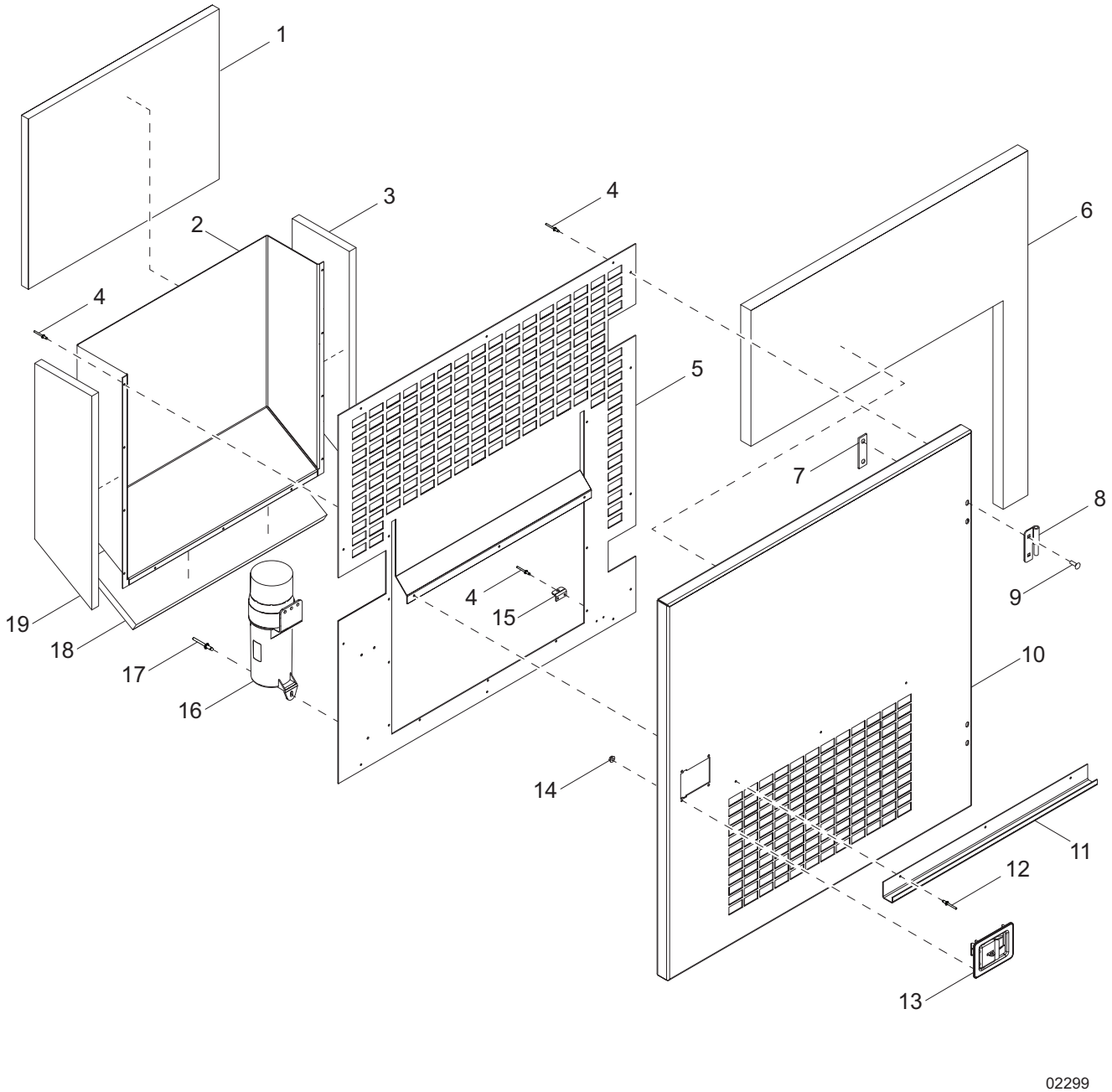

Item	Part No.	Qty	Description	Notes
1	54837	1	Foam, vent panel RH door	
2	54734W	1	Vent, side door	
3	54840	1	Foam, vent panel RH door - side cut	
4	60268	25	Rivet, .188 dia x .126 to .250 grip - SS	
5	54186B	1	Panel, inner door	
6	53534	1	Foam, RH door	
7	36672	2	Plate, hinge back - threaded	
8	18461B	2	Hinge, left - male	
9	63346	4	Screw, .312-18 x 1.0 Scytrx - SS	
10	54900W	1	Panel, front curbside door	
11	54769W	1	Gutter, side door	
12	60260	3	Rivet, .188 dia x .312 to .500 grip - SS	
13	54777	1	Latch, paddle slam - black	
14	60036	4	Nut, M6-1.00 sflg, G8.8	
15	20916	1	Bracket, prop rod	
16	36988	1	Manual holder, 4.00 dia - black	
17	32221	3	Rivet, .250 dia x .251 to .375 grip - aluminum	
18	54841	1	Foam, vent panel RH door - bottom	
19	54838	1	Foam, vent panel RH door - side	

FUEL PANEL ASSEMBLY

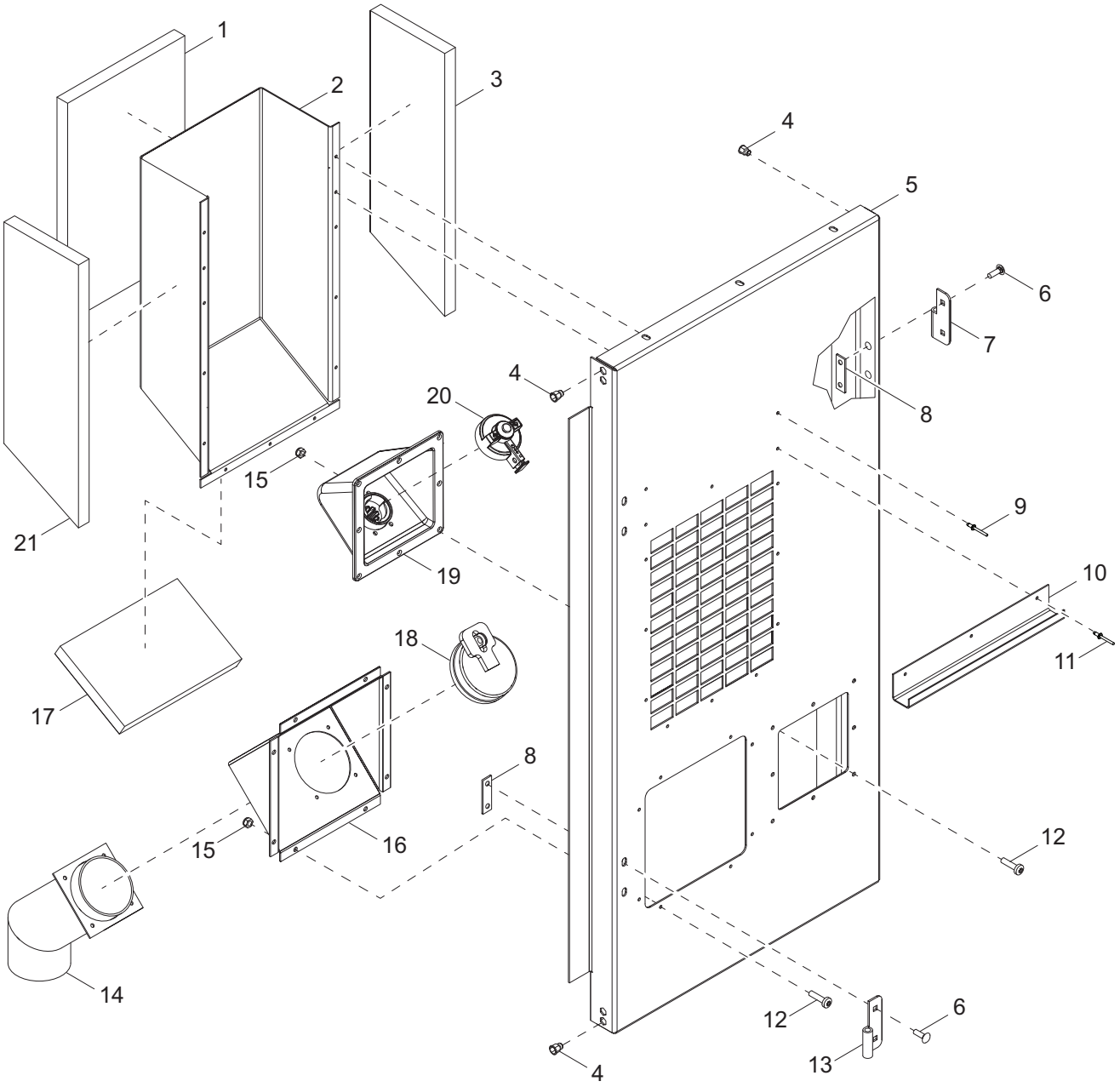

Item	Part No.	Qty	Description	Notes
1	54850	1	Foam, rear door - back	
2	54732W	1	Panel, vent rear door	
3	54851	1	Foam, rear door - left	
4	63097	8	Insert, threaded .313-18 hex .027-.150 grip	
5	53414W	1	Panel, rear LH	
6	63346	8	Screw, .312-18 x 1.0 Scytrx - SS	
7	18462B	2	Hinge, right - female	
8	10000011935	4	Plate, hinge back - threaded	
9	60268	11	Rivet, .188 dia x .126 to .250 grip - SS	
10	54768W	1	Gutter, rear door	
11	61226	2	Rivet, .188 dia x .250 to .375 grip - AL	
12	60540	20	Screw, 10-24 x .750 pan phil - SS	
13	18460B	2	Hinge, left - female	
14	23710B	1	Weldment, 3.50 fuel fill neck	
15	60530	20	Nut, 10-24 nylock - SS	
16	23697B	1	Panel, fuel inlet	
17	54853	1	Foam, rear door - bottom	
18	55104	1	Cap, fuel fill 3.50 - green	
19	54007	1	Assembly, fluid guard	
20	54005	1	Cap, def fill	
21	54852	1	Foam, rear door - right	

RECEPTACLE / E-STOP PANEL ASSEMBLY

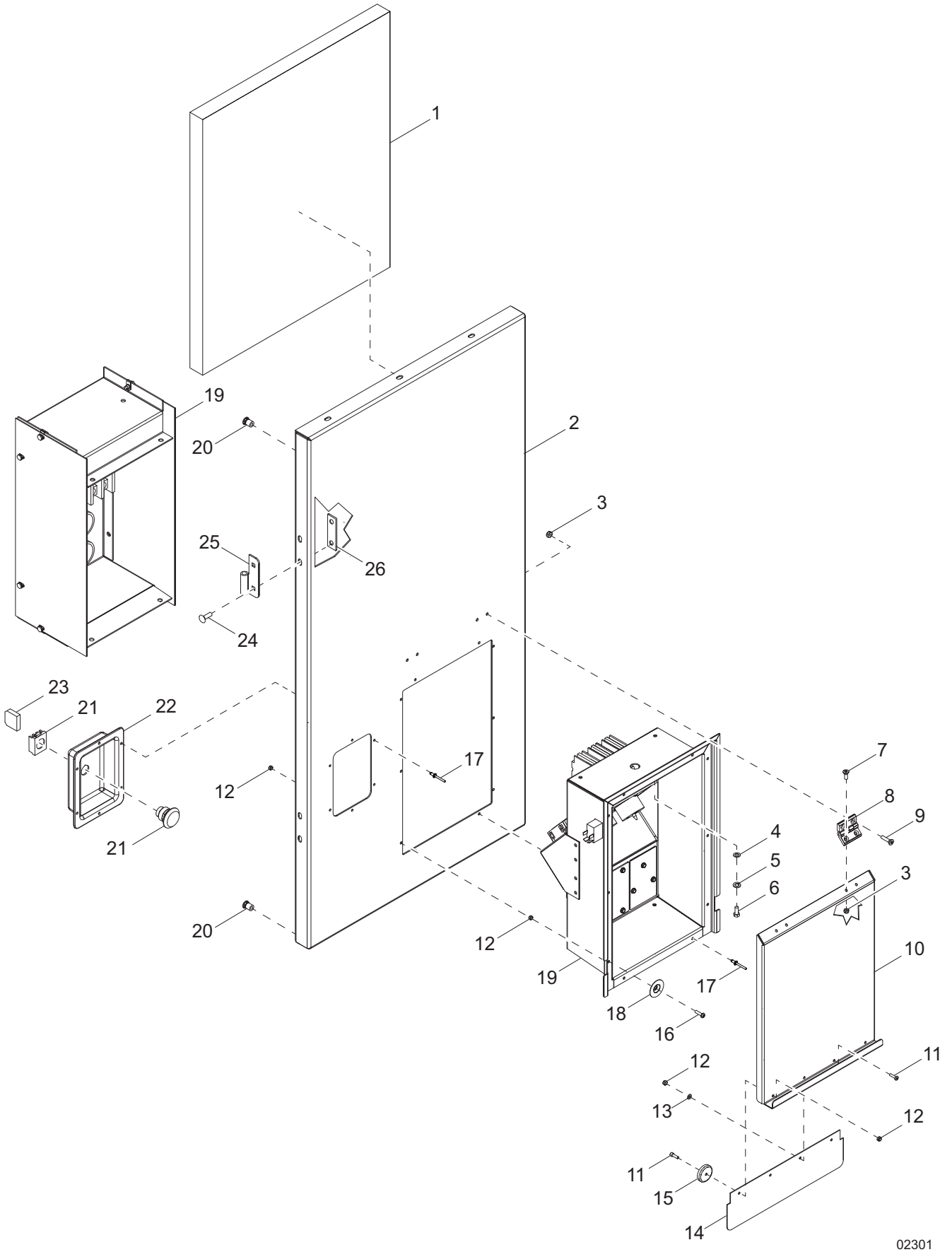

Item	Part No.	Qty	Description	Notes
1	55005	1	Foam, receptacle/E-stop	
2	53980W	1	Panel, receptacle/E-stop	
3	60530	8	Nut, 10-24 nylock, SS	
4	60243	4	Washer, .250 flat .735/.060	
5	60286	4	Washer, .250 split lock	
6	60281	4	Screw, .250-20 x .750 std hex, G5	
7	54135	4	Screw, 10-24 x .500 flat head phil - SS	
8	35394	2	Hinge, door - small	
9	35290	4	Screw, 10-24 x 1.00 flat head phil - SS	
10	51719W	1	Door, receptacle box	
11	60277	4	Screw, 10-32 x .500 pan phil - SS	
12	60061	8	Nut, 10-32 nylock	
13	60269	2	Washer, #8 flat .433/.036	
14	51721	1	Flap, receptacle door - rubber	
15	51725	2	Cup, magnet 1-15/64 dia -14# pull	
16	61180	2	Screw, 10-32 x .750 pan phil - SS	
17	60260	14	Rivet, .188 dia x .375 to .500 grip - SS	
18	62140	2	Washer, cup #10 1.50/.03	
19	54990	1	Assembly, receptacle/breaker box	
20	63231	4	Insert, threaded .250-20 hex .027-.165 grip	
21	65470	1	Switch, E-stop operator	
22	30645	1	Panel, emergency stop	
23	65580	1	Block, E-stop contactor	
24	63346	4	Screw, .312-18 x 1.00 Scytrx sq - SS	
25	18460B	2	Hinge, left (male)	
26	10000011935	2	Plate, hinge back - threaded	

RECEPTACLE PANEL ASSEMBLY

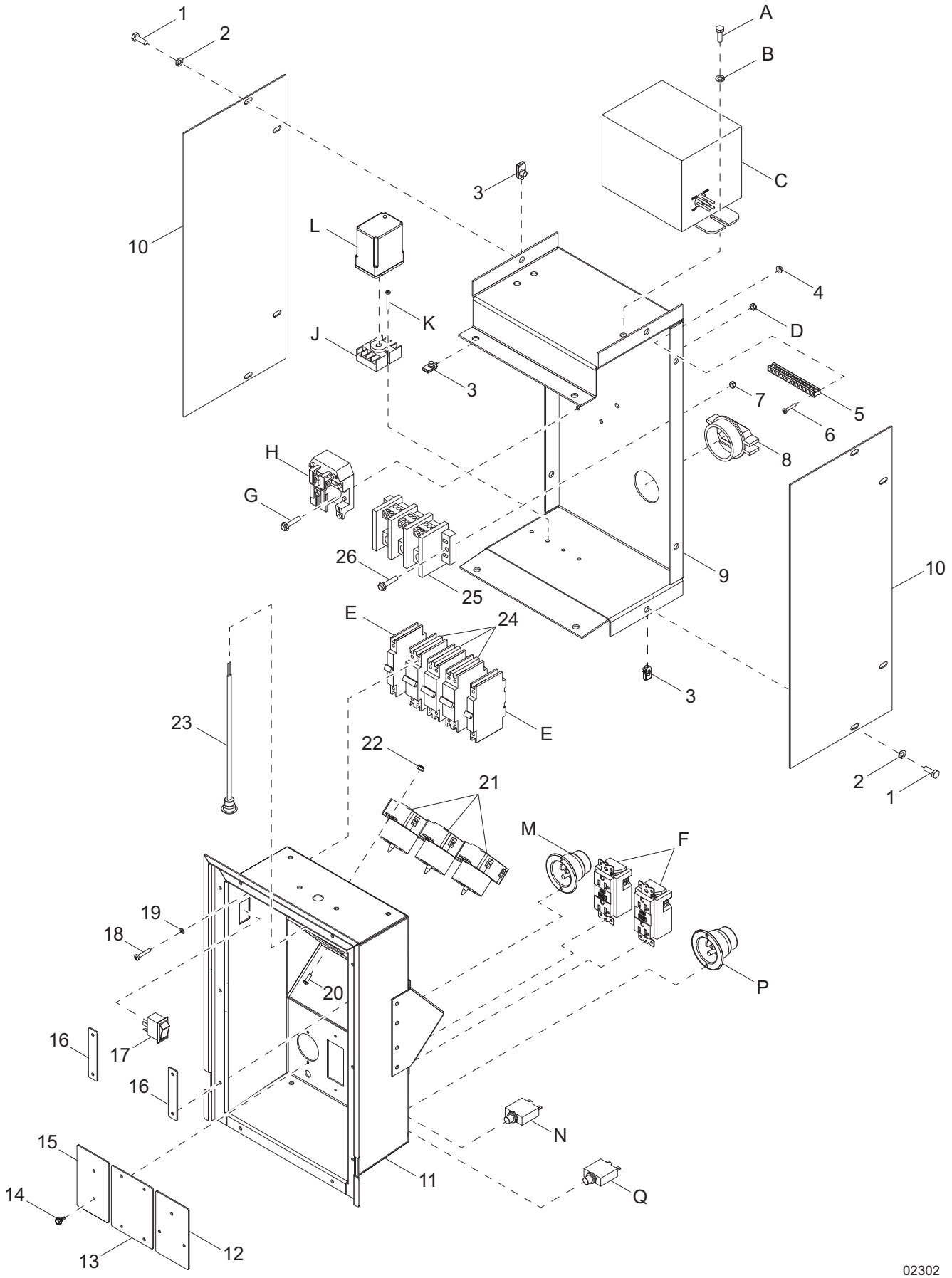

Item	Part No.	Qty	Description	Notes
1	60281	12	Screw, .250-20 x .750 hex, G5	
2	60286	12	Washer, .250 split lock	
3	61143	12	Nut, .250-20 uclip, short type	
4	61045	2	Nut, 10-32 sflg	
5	14204	1	Kit, ground bar	
6	60397	2	Screw, 10-32 x 1.00 pan phil, G2	
7	60036	2	Nut, M6-1.00 sflg hex, G8.8	
8	65788	1	Strain relief, 2.0 Romex w/nut	
9	54991B	1	Box, back receptacle	
10	51715B	2	Panel, back receptacle	
11	54989B	1	Box, receptacle/breaker/outlet LED	
12	10000009636	1	Cover, block heater receptacle	
13	10000009672	1	Cover, buck transformer receptacle	
14	60364	9	Screw, 10-16 x .500 hex, G2 - self drilling	
15	10000009645	1	Cover, battery charger receptacle	
16	10000009680	2	Cover, 20A breaker	
17	66995	1	Switch, rocker - DPST, on-off	
18	60046	16	Screw, 6-32 x .750 pan phil, G2	
19	60058	16	Washer, #6 split lock	
20	62054	6	Screw, 8-32 x .500 pan phil, SS	
21	18089	3	Receptacle, 240V/50A twist lock	
22	60270	6	Nut, 8-32 nylock, G6	
23	39651	1	Light, controls	
24	18092	3	Breaker, 50A, 240V - 2 pole	
25	65356	1	Block, terminal - 3 pole	
26	60024	2	Screw, M6-1.00 x 25 sflg hex	
OPTIONAL FEATURES				
Buck Transformer w/Receptacles:				
A	60281	2	Screw, .250-20 x .750 hex, G5	
B	60286	2	Washer, .250 split lock	
C	21487	1	Transformer, 1.13:1, 1-phase, 500VA	
D	60036	2	Nut, M6-1.00 sflg hex, G8.8	
E	18091	2	Breaker, 20A, 240V - 1 pole	
F	14130	2	Receptacle, 120V/20A GFI	
G	60024	2	Screw, M6-1.00 x 25 sflg hex	
H	65461	1	Relay, 30A DPDT - 120VAC	
J	65644	1	Base, relay - 8 position	
K	60288	4	Screw, 6-32 x 1.250 pan phil, G2	
L	66340	1	Relay, voltage sensing (132 in - 126 out)	
Battery Charger:				
M	65285	1	Receptacle, 125V/15A inlet	
N	15568	1	Breaker, 15A 120V - 1 pole, push button	
Block Heater:				
P	68635	1	Receptacle, 125V/30A inlet	
Q	14432	1	Breaker, 30A 120V - 1 pole, push button	

CONTROL BOX DOOR ASSEMBLY

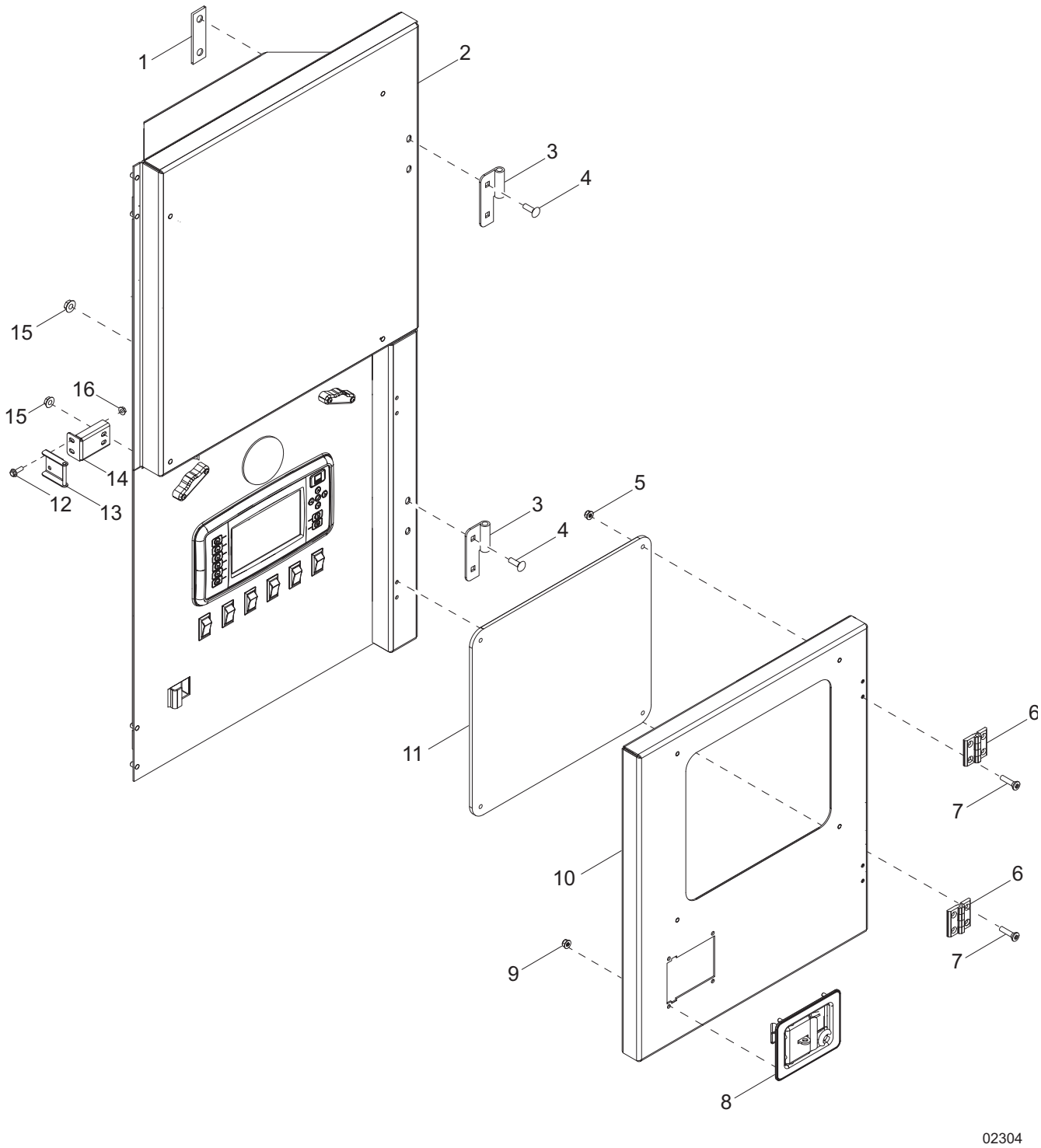

Item	Part No.	Qty	Description	Notes
1	10000011935	1	Plate, hinge back - threaded	
2	55053W	1	Weldment, control door	
3	18460B	2	Hinge, left (female)	
4	63346	4	Screw, .312-18 x 1.00 Scytrx - SS	
5	63075	8	Nut, .250-20 flg nylock, G5	
6	35394	2	Hinge, door - small	
7	54135	8	Screw, 10-24 x .500 flat head phil - SS	
8	54777	1	Latch, paddle slam - black	
9	60036	4	Nut, M6-100 sflg hex, G8.8	
10	55028W	1	Door, controls - small	
11	54387	1	Window, rear display	
12	60175	2	Screw, .250-20 x .500 sflg hex, G5	
13	10000013494	1	Weldment, stricker	
14	10000014172	1	Mount, door striker	
15	60161	2	Nut, .250-20 sflg, G5	
16	60095	2	Nut, .312-18 sflg hex	

CONTROL PANEL ASSEMBLY (2 OF 2)

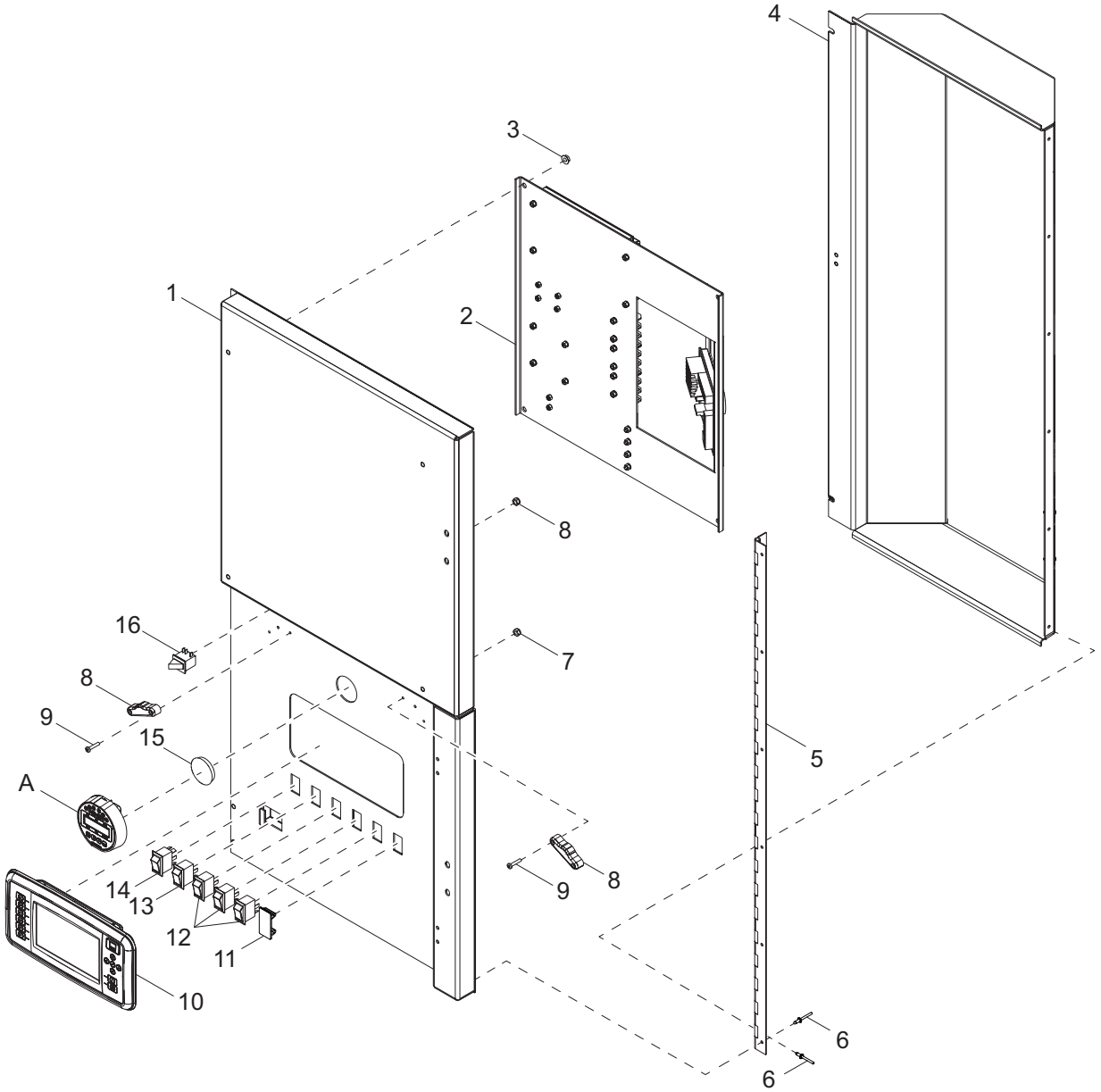

Item	Part No.	Qty	Description	Notes
1	55053W	1	Door, main controls	
2	55031	1	Assembly, control panel - sub	
3	60095	6	Nut, .312-18 sflg hex	
4	55026W	1	Door, rear control door	
5	11095	1	Hinge, continuous - 43.00	
6	60268	12	Rivet, .188 dia x .126 to .250 grip - SS	
7	60270	4	Nut, 8-32 nylock, G6	
8	54555	2	Assembly, LED lighting	
9	60695	4	Screw, 8-32 x 1.00 pan phil - SS	
10	33157	1	Display, 7” DSE	
11	34439	1	Plug, panel switch	
12	66995	4	Switch, rocker - DPST, on-off	
13	66996	1	Switch, rocker - DPDT, on-off/(on)	
14	68530	1	Switch, rocker - DSPT, on-on	
15	32956	1	Plug, hole 2.00 press in - nylon	
16	12632	1	Switch, trigger safety	
OPTIONAL FEATURES				
Paralleling Kit:				
A	55103	1	Display	

CONTROL PANEL ASSEMBLY (1 OF 2)

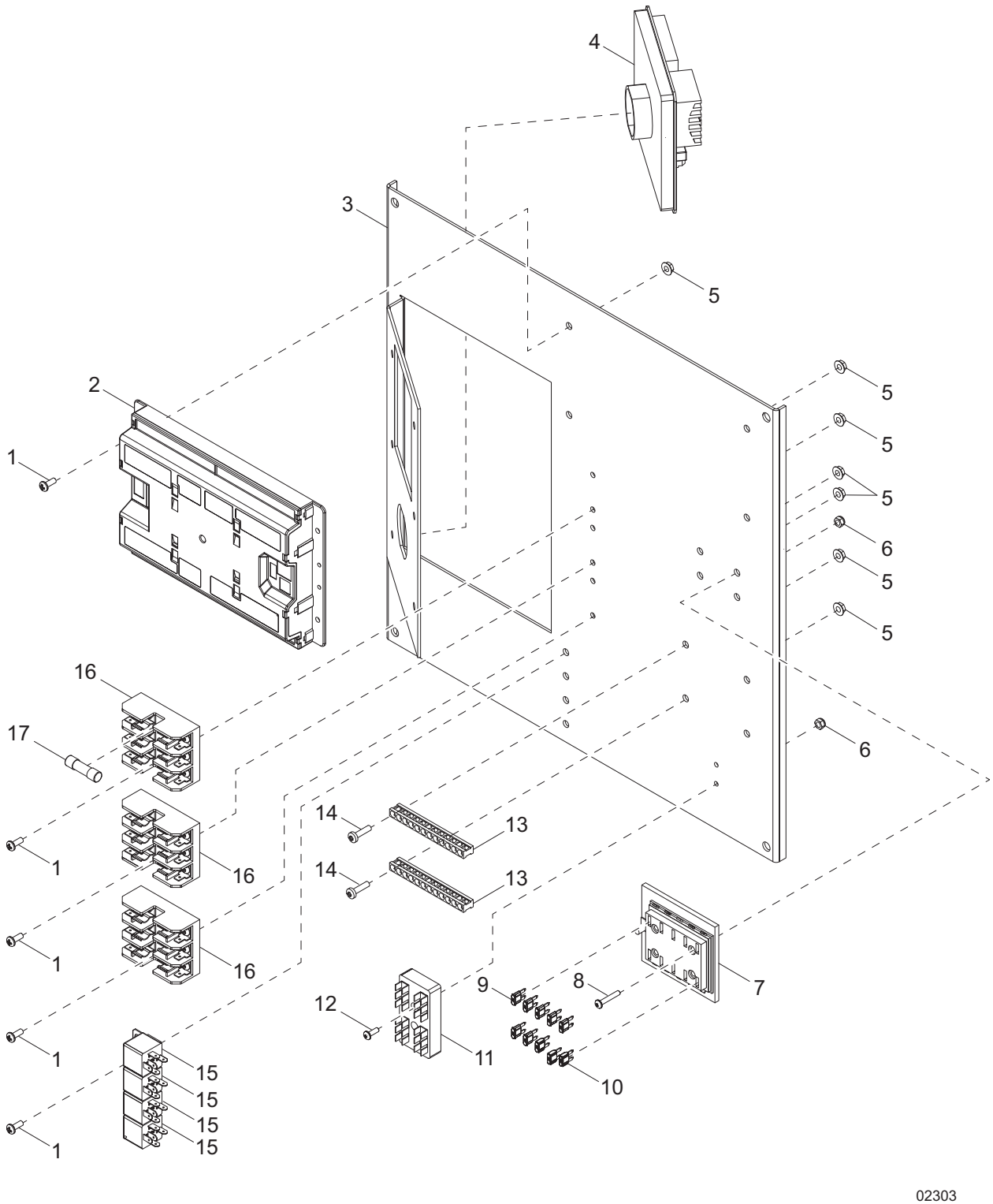

Item	Part No.	Qty	Description	Notes
1	60277	14	Screw, 10-32 x .500 pan phil, G2	
2	32979	1	Controller, Deep Sea 7740	
3	10000011770	1	Controls, sub plate	
4	68015	1	Regulator, voltage	
5	61045	14	Nut, 10-32 sflg	
6	62068	6	Nut, 8-32 nylock - SS	
7	10000007847	1	Fuse block, 10 position	
8	54150	4	Screw, 8-32 x 1.00 pan phil	
9	35560	7	Fuse, 20A	
10	68204	3	Fuse, 15A	
11	66992	1	Terminal block, 4 x 6 push-on	
12	62054	2	Screw, 8-32 x .500 pan phil - SS	
13	14204	2	Kit, ground bar	
14	60062	4	Screw, 10-32 x .750 pan phil, G2	
15	65049	4	Relay, 12V 30/40A N.O. w/diode	
16	0D2572	3	Fuse block, 30A 600V - 3 pos w/sq	
17	073590A	9	Fuse, 5A	

BREAKER/LUG BOX ASSEMBLY

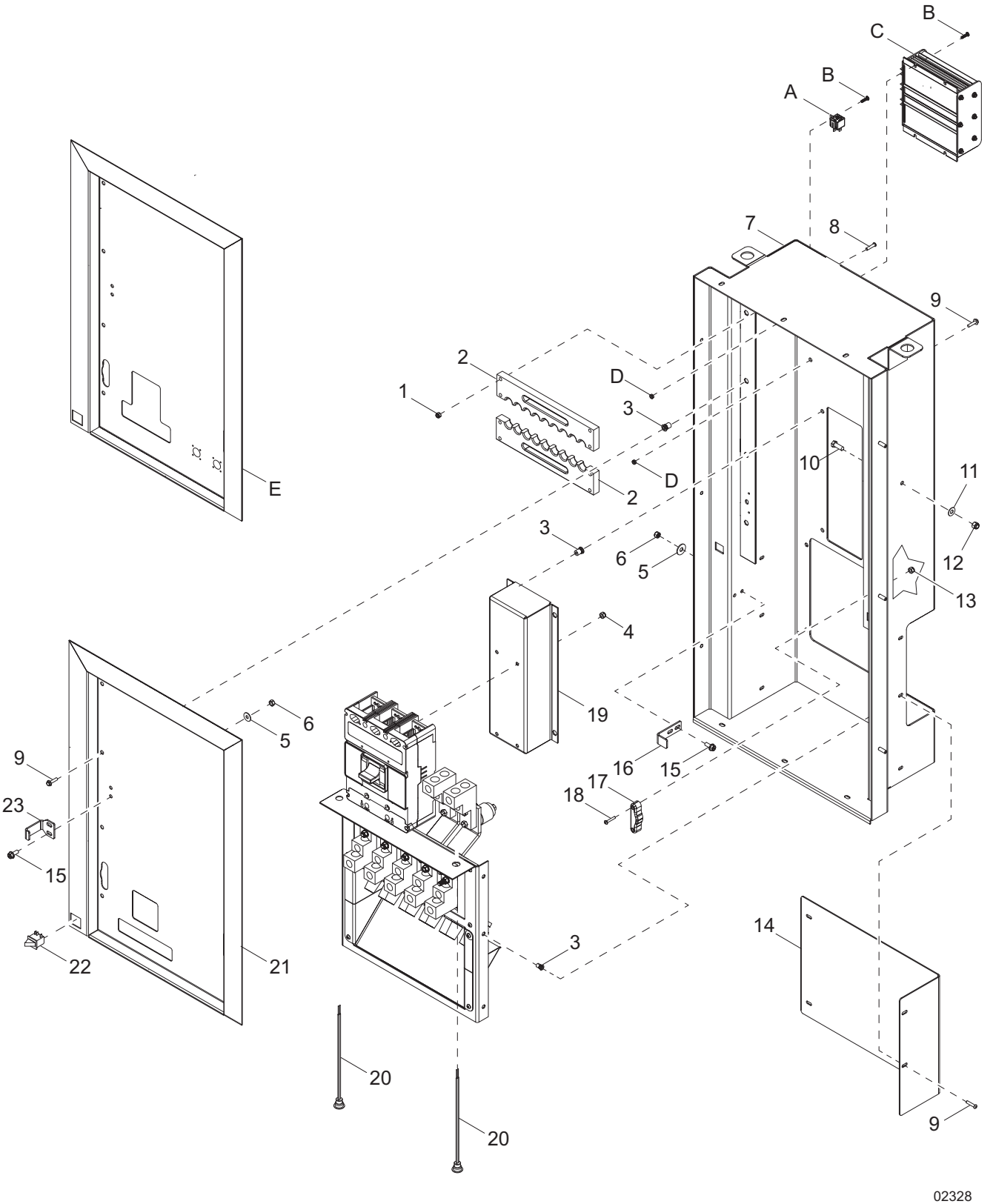

Item	Part No.	Qty	Description	Notes
1	60144	8	Nut, .250-20 nylock, G5	
2	56346	2	Plate, cable support	
3	63097	14	Insert, threaded .312-18 hex .027-.150 grip	
4	60303	4	Nut, .312-18 nylock, G2	
5	60340	4	Washer, .312 flat .875/.040	
6	60784	4	Nut, .312-18 nylock - SS	
7	54030W	1	Weldment, AC power box	
8	68070	8	Screw, .250-20 x 1.00 button hex - SS	
9	61091	14	Screw, .312-18 x 1.00 sflg hex, G5	
10	60690	1	Screw, .375-16 x 1.00 std hex - SS	
11	60698	1	Washer, .375 flat .875/.040 - SS	
12	60792	1	Nut, .375-16 nylock - SS	
13	60270	4	Nut, 8-32 nylock, G6	
14	56363W	1	Plate, rear control box	
15	60616	4	Screw, .312-18 x .750 sflg hex, G5	
16	55021W	1	Striker, lug door	
17	54555	2	Assembly, LED light	
18	60695	4	Screw, 8-32 x 1.00 pan phil - SS	
19	54976W	1	Mount, breaker	
20	12632	1	Switch, trigger safety, N.O.	
21	39651	2	Light, controls	
22	51744W	1	Panel, AC distribution	
23	55022W	1	Striker, breaker door	
OPTIONAL FEATURES				
Paralleling Kit:				
A	67028	2	Relay, 24V 30/40A N.O. w/diode	
B	60850	6	Screw, 10-24 x .750 pan phil, G2	
C	10000009022	1	Converter, DC - DC 12V-24V	
D	60457	6	Nut, 10-24 nylock, G2	
E	54899W	1	Panel, AC distribution - paralleling	

BREAKER AND LUG ASSEMBLY

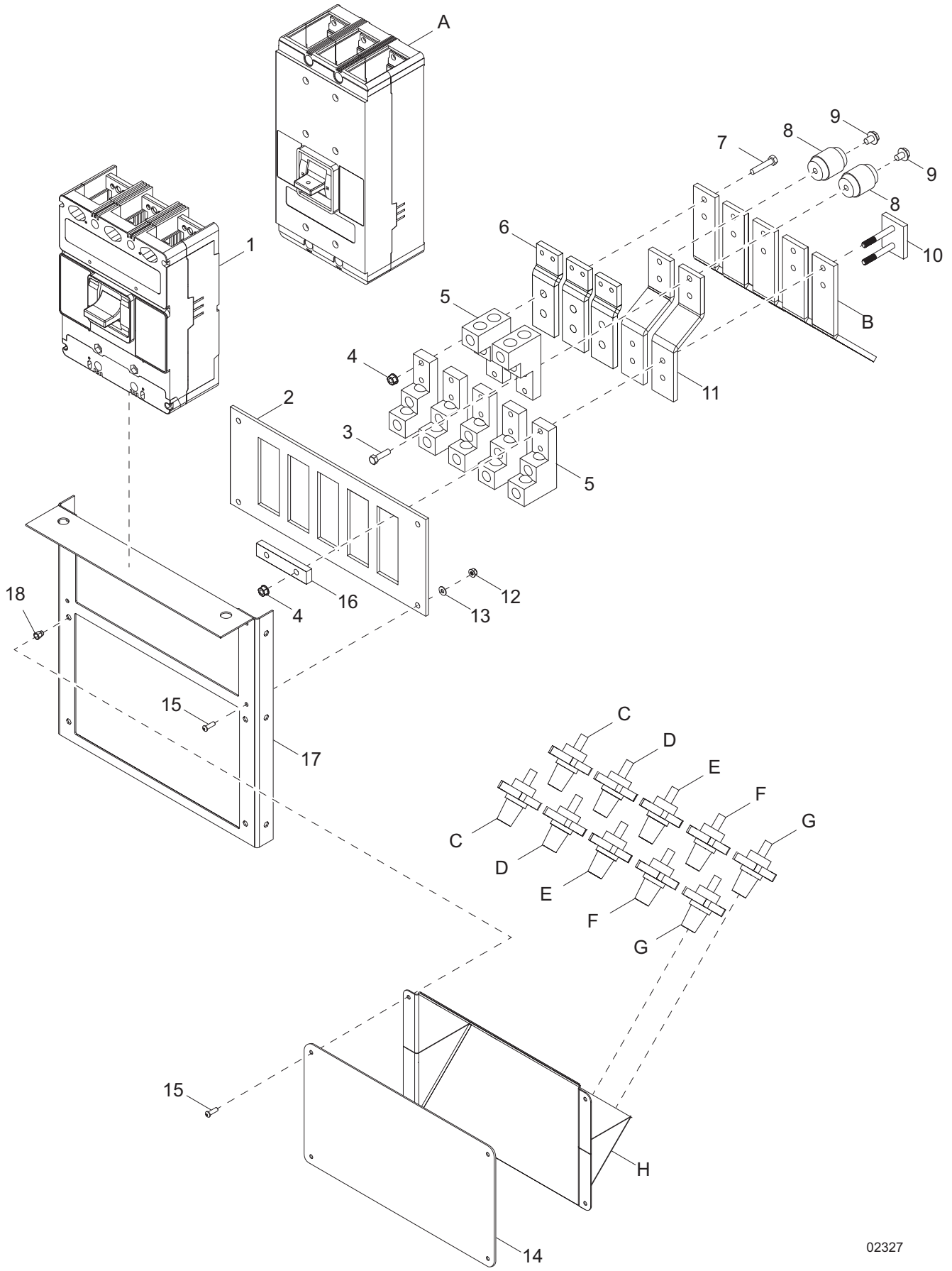

Item	Part No.	Qty	Description	Notes
1	10000007615	1	Breaker, 600A, 3 pole, 9-24V	
2	54959	1	Panel, AC box	
3	60139	2	Screw, .375-16 x 1.50 std hex, G5	
4	60145	20	Nut, .375-16 sflg, G5	
5	65890	7	Lug, terminal dual #6-35MCM - 2 hole	
6	10000008297	3	Bus bar, breaker to lug	
7	60478	16	Screw, .375-16 x 2.00 std hex, G5	
8	69604	2	Insulator, standoff -2700V	
9	62049	2	Screw, .375-16 x .500 sflg hex - SS	
10	56362	2	Assembly, bolt plate	
11	54957	2	Bus bar, ground - neutral	
12	60144	4	Nut, .250-20 nylock, G5	
13	60696	4	Washer, .250 flat .625/.050 - SS	
14	54955	1	Plate, AC distribution - no cam	
15	68070	8	Screw, .250-20 x 2.00 button hex - SS	
16	56361	1	Bus bar	
17	54946W	1	Bracket, cam lock - 2 row	
18	63097	4	Insert, threaded .312-18 hex .027-.150 grip	
OPTIONAL FEATURES				
Paralleling Kit:				
A	55108	1	Breaker, motorized 500A, 100% RTD	
B	54997	3	Bus bar, spacer - parallel	
Cam Locks:				
C	65551	2	Connector, cam lock, female 400A - black	
D	65552	2	Connector, cam lock, female 400A - red	
E	65553	2	Connector, cam lock, female 400A - blue	
F	65554	2	Connector, cam lock, male 400A - white	
G	65555	2	Connector, cam lock, male 400A - green	
H	54945W	1	Panel, cam lock - 2 row	

AIR FILTER ASSEMBLY

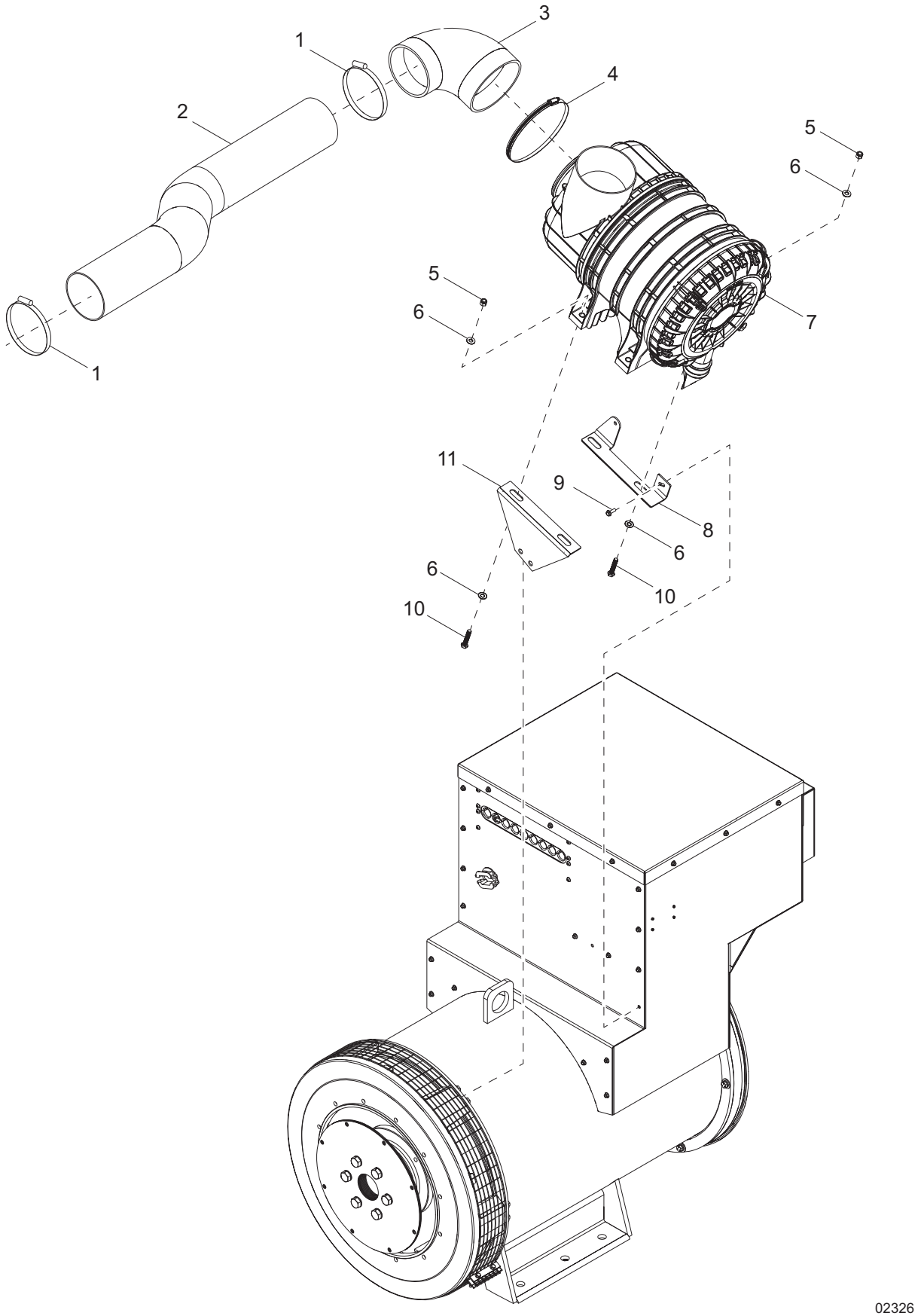

Item	Part No.	Qty	Description	Notes
1	20182	2	Clamp, hose SAE088 (4.09-6.00)	
2	10000007997	1	Pipe, air intake	
3	54849	1	Elbow, 90 degree 6.0-5.0 - rubber	
4	21712	1	Clamp, hose SAE116 (5.75-7.75)	
5	60358	4	Nut, .375-16 nylock, G5	
6	60151	8	Washer, .375 flat .810/.060	
7	54881	1	Filter, air	
8	10000007995	1	Bracket, air filter	
9	60107	2	Screw, .250-20 x .750 sflg hex, G5	
10	60478	4	Screw,	
11	10000007984	1	Bracket, air filter	

COOLING SYSTEM ASSEMBLY

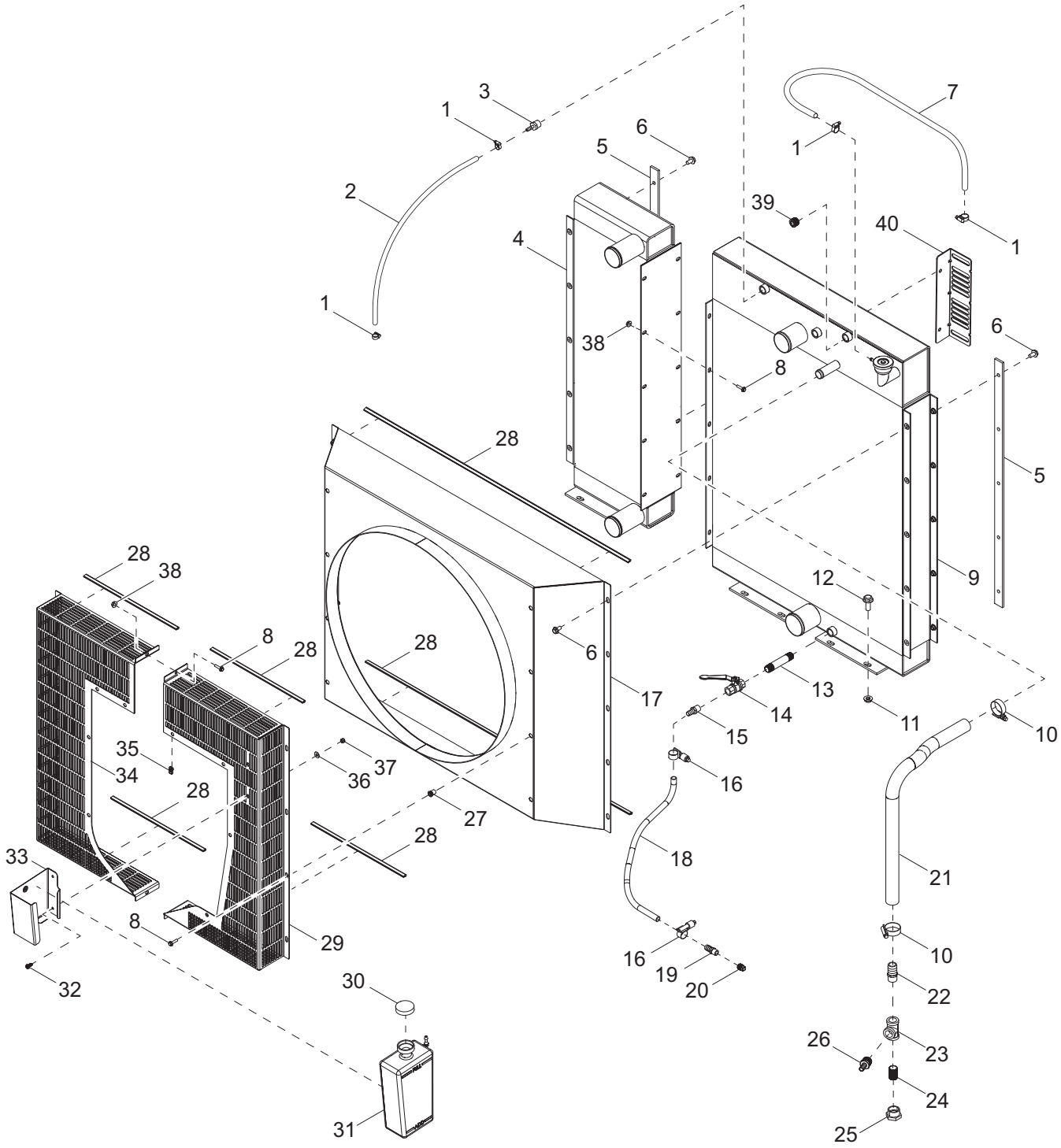

Item	Part No.	Qty	Description	Notes
1	19453	4	Clamp, hose SAE006 (.37-.87)	
2	54963	1	Hose, .3125 x 1.50 ft	
3	60999	1	Fitting, strt .500MNPT x .312 barb - brass	
4	55125	1	Assembly, CAC	
5	10000008522	2	Spacer, insulation	
6	60487	11	Screw, .375-16 x 1.50 sflg hex, G5	
7	50018	1	Hose, radiator overflow	
8	61091	20	Screw, .312-18 x 1.00 sflg hex, G5	
9	55124	1	Radiator assembly	
10	15422	2	Clamp, hose SAE020 (.75-1.75)	
11	60098	6	Nut, .500-13 sflg hex	
12	61100	6	Screw, .500-13 x 1.00 sflg hex, G5	
13	40738	1	Fitting, nipple .500MNPT x 4.00	
14	19279	1	Valve ball, .500NPTF	
15	60502	1	Fitting, strt.500MNPT x .625 barb - brass	
16	60365	2	Clamp, hose SAE010 (.56-1.06)	
17	10000008332	1	Weldment, tapered fan shroud	
18	54979	1	Hose, radiator drain - 29.00 in	
19	25931	1	Fitting, strt .375NPT x .625 barb	
20	42683	1	Plug, .375 CL150 - square head	
21	54961	1	Hose, water pump return	
22	25496	1	Fitting, strt .750MNPT x 1.00 barb - brass	
23	61044	1	Fitting, tee .750NPT - brass	
24	62027	1	Fitting, nipple .750NPT x close - brass	
25	HW4046A126	1	Fitting, M30-2.0 male x .750FNPT	
26	40667	1	Fitting, strt .750MNPT x .500 barb - brass	
27	63097	8	Insert, threaded .313-18 hex .027-.150 grip	
28	19351	6	Seal, u-channel	
29	10000008482	1	Guard, fan - curbside	
30	19714	1	Cap, overflow bottle	
31	24952	1	Jug, overflow 2.5 qt	
32	63358	2	Screw, .250-20 x .625 hex washer head	
33	26211	1	Bracket, overflow jug	
34	10000008503	1	Guard, fan - roadside	
35	61143	8	Nut, .250-20 uclip - short type	
36	60243	2	Washer, .250 flat .735/.060	
37	60144	2	Nut, .250-20 nylock, G5	
38	60095	12	Nut, .312-18 sflg	
39	55008	1	Plug, .500 NPT hex	
40	10000007559	1	Bracket, DEF line support	

COOLING SYSTEM HOSES

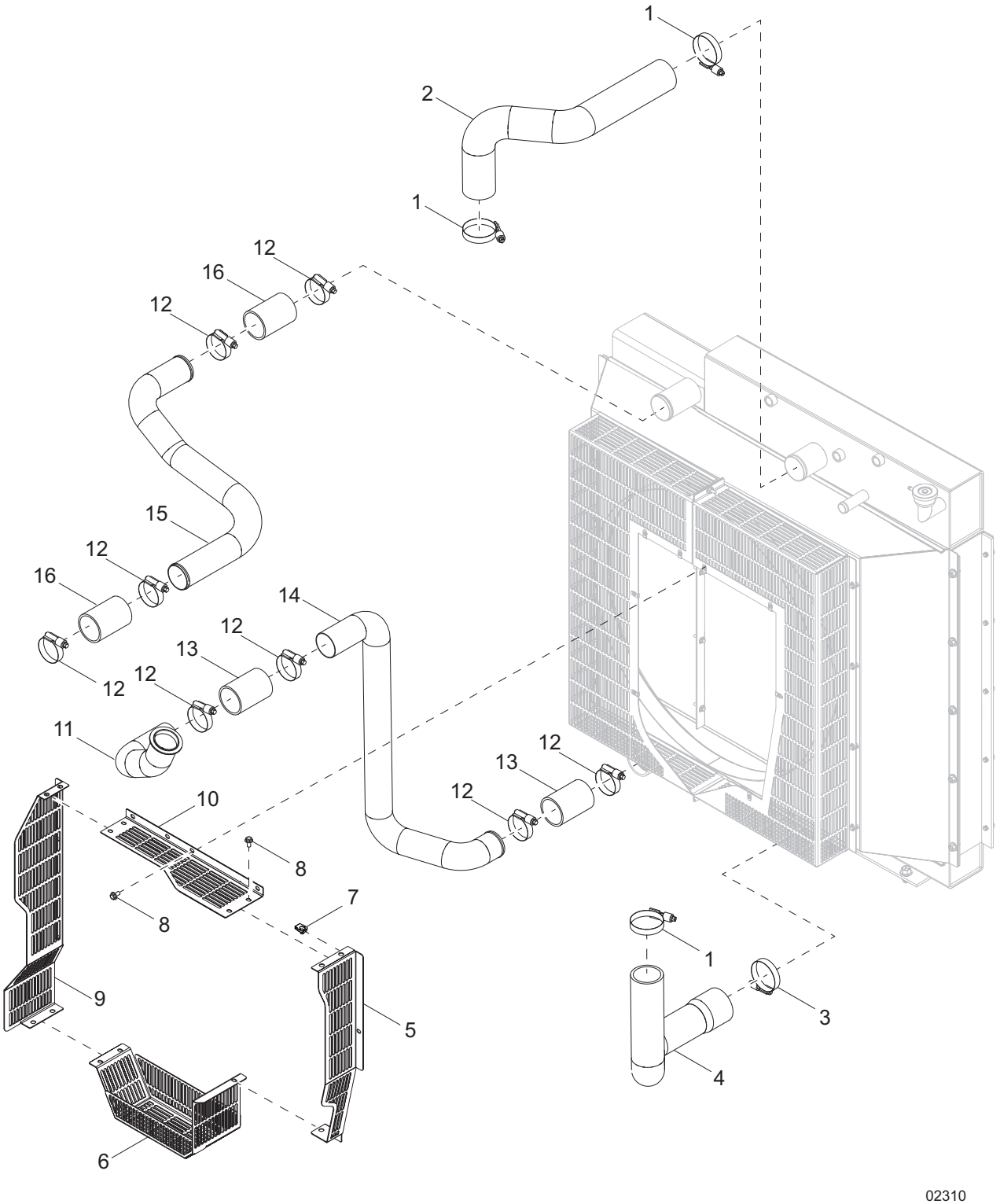

Item	Part No.	Qty	Description	Notes
1	60666	3	Clamp, hose - constant torque 2.25-3.125	
2	53627	1	Hose, radiator input	
3	60664	1	Clamp, hose - constant torque 2.75-3.625	
4	53628	1	Hose, radiator output	
5	10000008447	1	Belt guard, curbside	
6	10000008499	1	Belt guard, bottom	
7	61143	8	Nut, .250-20 uclip short type	
8	60175	16	Screw, .250-20 x .500 sflg hex, G5	
9	10000008486	1	Belt guard, roadside	
10	10000008472	1	Belt guard, top	
11	54225	1	Assembly, CAC pipe - lower	
12	60666	8	Clamp, hose - constant torque 2.25-3.125	
13	22060	2	Hose, CAC 2.00 - 2.50 x 4.00	
14	10000014083	1	Pipe, CAC - lower	
15	53630	1	Pipe, CAC - upper	
16	28541	2	Hose, CAC 2.50 x 4.00 long	

LIFT STRUCTURE

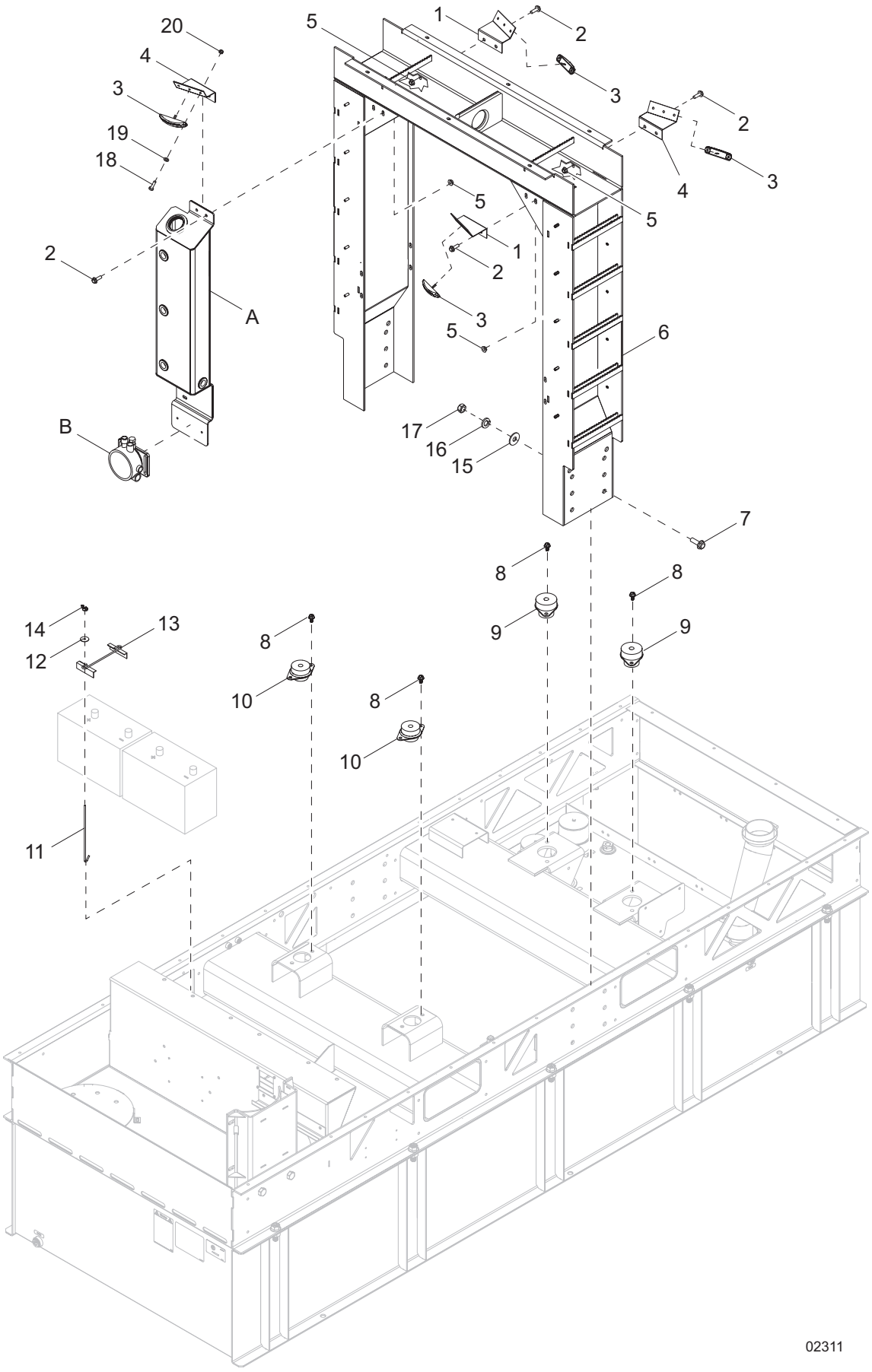

Item	Part No.	Qty	Description	Notes
1	55116B	2	Bracket, interior light - LH	
2	60295	8	Screw, .375-18 x .750 std hex - SS	
3	54772	4	Light, LED surface mount	
4	55112B	2	Bracket, interior light - RH	
5	60145	8	Nut, .375-16 sflg, G5	
6	54933B	1	Weldment, lift structure	
7	61078	12	Screw, .625-11 x 2.00 flg hex, G8	
8	62259	8	Screw, M10-1.50 x 30 sflg hex, G10.9	
9	53377	2	Isolator, rubber 1500/1000	
10	52671	2	Isolator, rubber 680/1020	
11	14146	4	Bolt, J .250-20 x 10.00	
12	60089	4	Washer, .265 fender 1.250/.060	
13	14682	2	Bracket, battery hold-down	
14	60090	4	Nut, .250-20 wing, G5	
15	60521	12	Washer, .625 flat 1.743/.108	
16	60194	12	Washer, .625 lock	
17	60520	12	Nut, .625-11 hex, G8	
18	60397	8	Screw, 10-32 x 1.00 pan phil, G2	
19	60067	8	Washer, #10 flat .435/.060 - SS	
20	60061	8	Nut, 10-32 nylock	
OPTIONAL FEATURES				
Oil Tank:				
A	26631	1	Gauge, oil sight w/level maintainer	
B	56386	1	Weldment, oil tank	

ENGINE AND GENERATOR TO UNIT

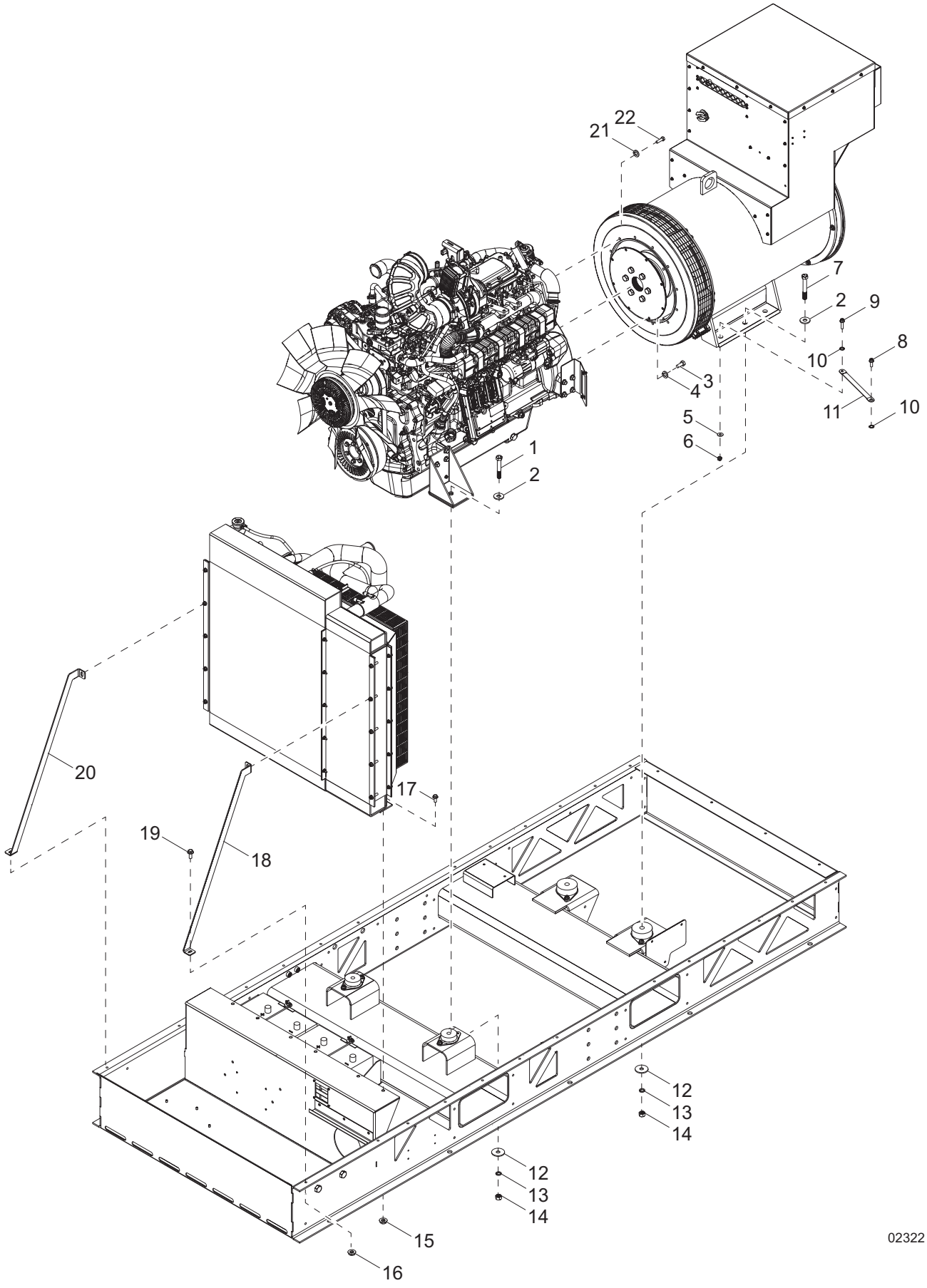

Item	Part No.	Qty	Description	Notes
1	69924	2	Screw, .625-11 x 4.00 std hex, G8	
2	60521	4	Washer, .625 flat 1.743/.108	
3	60717	8	Screw, .375-16 x .750 socket hex	
4	60206	8	Washer, .375 split lock	
5	60386	1	Washer, .375 flat .993/.064	
6	60145	1	Nut, 375-16 sflg hex, G5	
7	42775	2	Screw, .625-11 x 4.50 std hex, G5	
8	60353	1	Screw, .375-16 x 1.00 flg hex, G2	
9	60487	1	Screw, .375-16 x 1.50 sflg hex, G5	
10	60369	2	Washer, M12 external star	
11	13083	1	Strap, braided ground - 10 in	
12	18086	4	Washer, .650 snub 2.250/.180	
13	60194	4	Washer, M16 split lock	
14	60520	4	Nut, .625-11 hex, G8	
15	60098	6	Nut, .500-13 sflg	
16	60095	2	Nut, .312-18 sflg	
17	61100	6	Screw, .500-13 x 1.00 sflg hex, G5	
18	10000011597	1	Support, STB roadside	
19	60516	2	Screw, .312-18 x 1.250 sflg hex	
20	10000011650	1	Suppoert, STB curbside	
21	60026	12	Washer, M10 split lock	
22	60177	12	Screw, M10-1.50 x 30 std hex, G10.9	

ENGINE BLOCK HEATER (OPTIONAL)

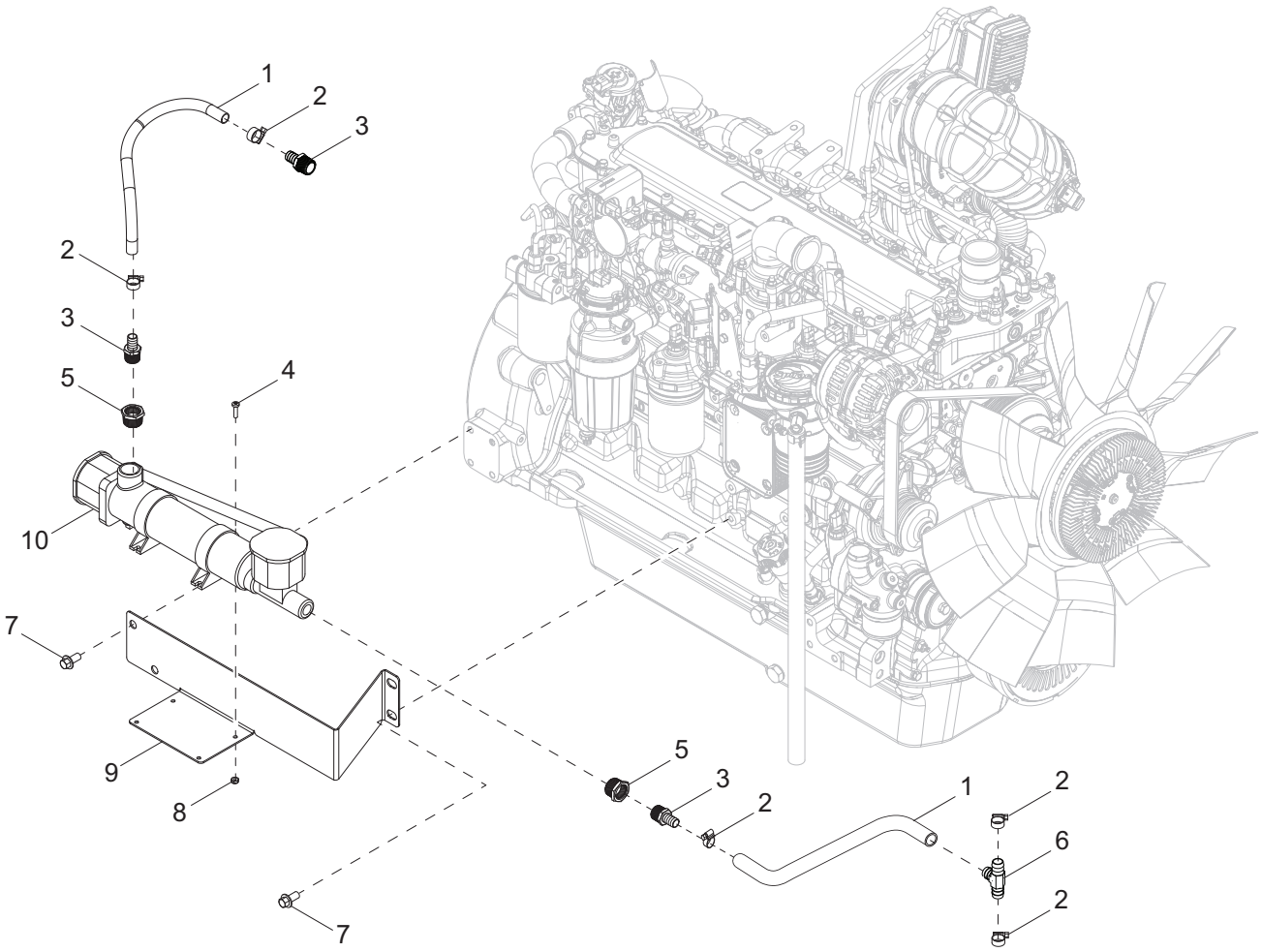

Item	Part No.	Qty	Description	Notes
1	50201	2	Hose, .625 Horizon 200PSI, class A	
2	19453	6	Clamp, hose - SAE 006 (.37 - .87)	
3	62076	3	Fitting, strt .750MNPT x .625 barb - brass	
4	60062	4	Screw, 10-32 x .750 pan phil, G2	
5	24006	2	Fitting, strt 1.00MNPT x .750FNPT	
6	0C9079D	1	Fitting, .375 tee, barbed - brass	
7	60072	4	Screw, M12-1.75 x 25 sflg hex, G10.9	
8	60415	4	Nut, 10-32 nylock - SS	
9	10000009261	1	Bracket, block heater	
10	28407	1	Heater, coolant 400-500CI, 120V 2500W	

ENGINE ASSEMBLY

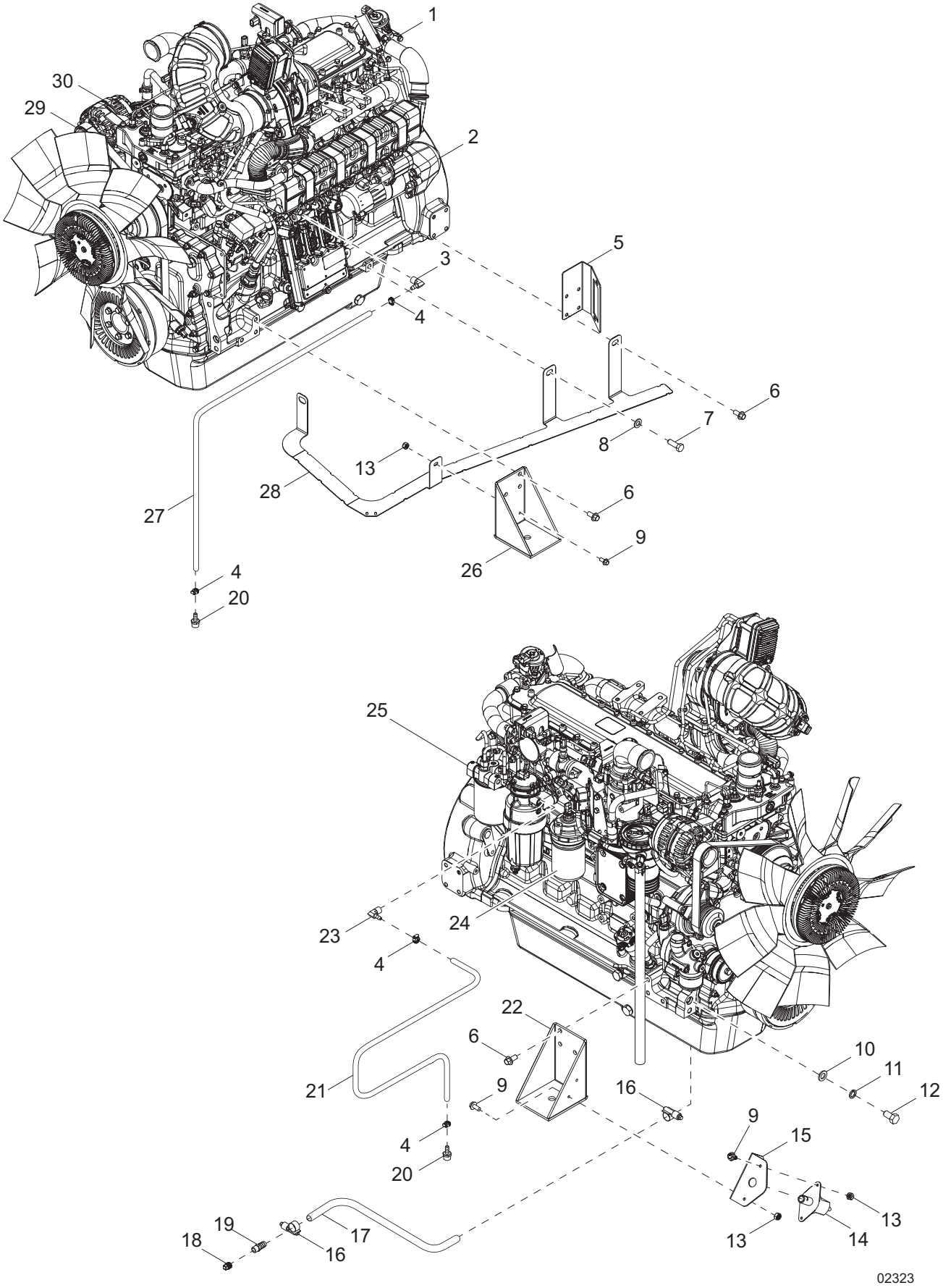

Item	Part No.	Qty	Description	Notes
1	51400	1	Engine, JD, 192 KW, 6068HFG05, tier 4F	
2	10000016989	1	Starter	
3	33413	1	Fitting, 90 degree, M12 x 1.50 x .375 barb	
4	14216	4	Clamp, hose SAE004 (.21-.62)	
5	54227B	1	Bracket, connector	
6	60072	12	Screw, M12-1.75 x 25 sflg hex, G10.9	
7	60499	1	Screw, M14-2.00 x 40 std hex, G8.8	
8	39351	1	Washer, flat M14	
9	60107	5	Screw, .250-20 x .750 sflg hex, G5	
10	60193	1	Washer, M16 flat	
11	60194	1	Washer, M16 split lock	
12	44531	1	Screw, M16 - 2.00 x 30 std hex, G8.8	
13	60161	5	Nut, .250-20 sflg, G5	
14	21489	1	Switch, battery disconnect - 500A	
15	54223B	1	Bracket, battery disconnect	
16	60365	2	Screw, M10-1.25 x 25 std hex, G10.9	
17	50201	5.0 ft	Hose, .625 class A - 200PSI	
18	42683	1	Plug, .375 CL15 - square head	
19	25931	1	Fitting, strt - .375NPT x .625 barb	
20	23816	2	Fitting, strt .500MNPT x .375 barb - brass	
21	50051	6.0 ft	Hose, fuel .375 ID SAE30R7 - 50 PSI	
22	51761B	1	Mount, engine - right	
23	33414	1	Fitting, 90 degree, M14 x 1.50 x .375 barb	
24	32245	1	Filter, oil	
25	10000012614	1	Kit, fuel filters 6.8L	
26	51762B	1	Mount, engine - left	
27	50051	6.0 ft	Hose, fuel .375 ID SAE30R7 - 50 PSI	
28	56370B	1	Support, hose and routing cables	
29	10000012588	1	Belt, fan	
30	33026	1	Alternator	

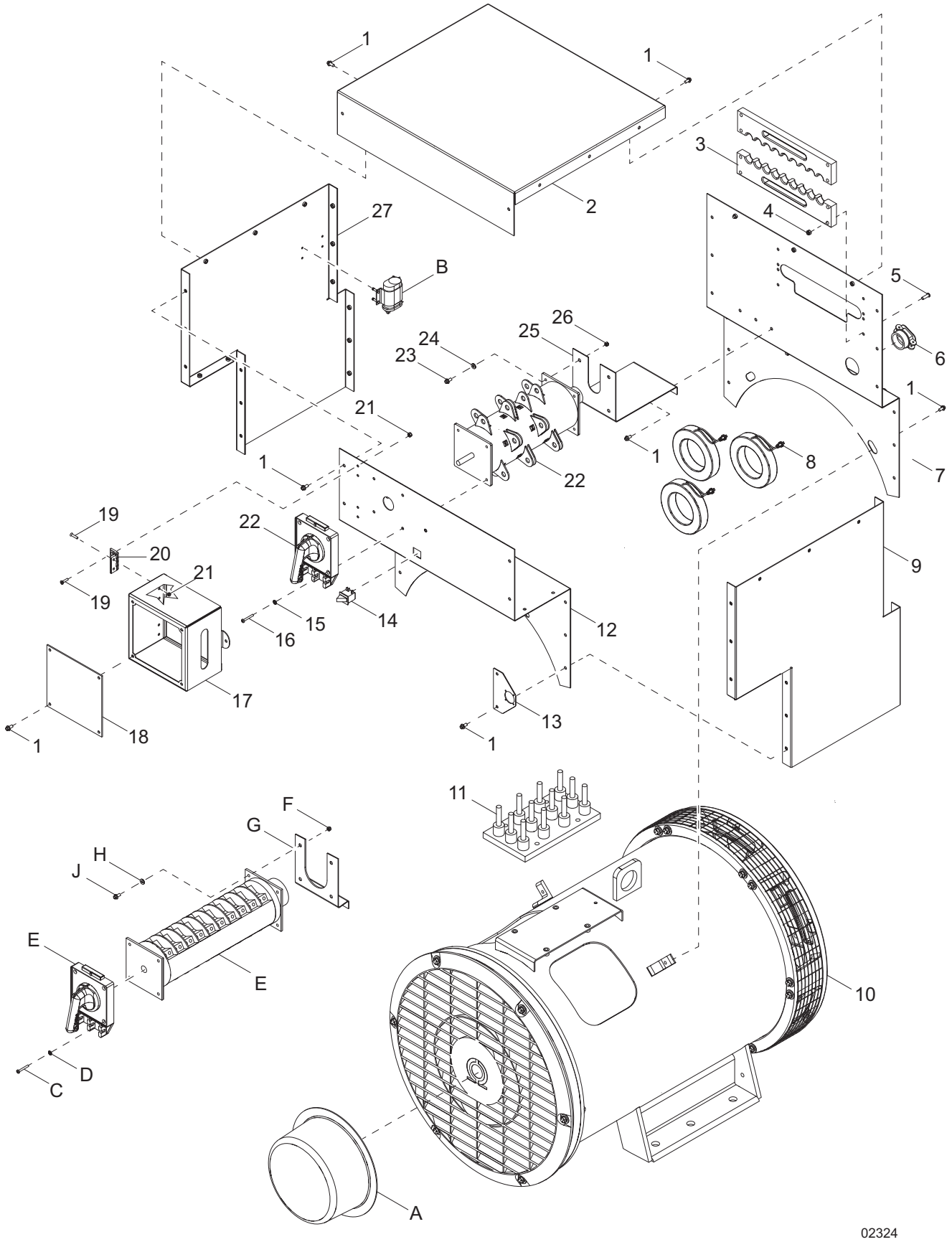
1
1
2
3
4
5
6
7
8
9
10
11
12
13
14
15
16
17
18
19
20
21
22
23
24
25
26
27
A
B
C
D
E
E
F
G
H
J
02324

Item	Part No.	Qty	Description	Notes
1	60175	40	Screw, .250-20 x .500 sflg hex, G5	
2	53981	1	Panel, top gen box	
3	56346	2	Plate, cable support	
4	60144	8	Nut, .250-20 nylock	
5	60518	8	Screw, .250-20 x 1.50 std hex, G5	
6	65239	1	Strain relief, 1.50 Romex w/nut	
7	10000012380	1	Panel, gen box - front	
8	0J0481H	3	XFMR current 800A w/o bracket	
9	10000012328	1	Panel, RH gen box	
10	51394	1	Generator, Marathon 432CSL6212	
11		1	Terminal Block	with generator
12	10000012362	1	Panel, rear generator box	
13	55051B	1	Mount, ECU connection	
14	12632	1	Switch, trigger safety, N.O. & N.C.	
15	60067	4	Washer, #10 flat .435/.060 - SS	
16	62046	4	Screw, 10-32 x 1.50 pan phil - SS	
17	55024B	1	Cover, phase selector	
18	55041	1	Lens, phase switch door	
19	73124	8	Screw, 10-24 x .875 flat head phil - SS	
20	35394	2	Hinge, door - small	
21	60530	8	Nut, 10-32 nylock - SS	
22	66337	1	Switch, PH-400A,3-PS	
23	60167	4	Screw, M5-0.80 x 35 pan phil, G4.8	
24	60041	4	Washer, M5 flat	
25	54015B	1	Bracket, phase switch - 3 pos	
26	60038	4	Nut, M5-.080 nylock, G6	
27	10000012359	1	Side panel, gen box	
OPTIONAL FEATURES				
CVS Kit:				
A	22728	1	Kit, stator/rotor/CVS 430PSL	
B	65308	1	Capacitor, 7.5 uF, 370 VAC	
4 Position Phase Switch:				
C	62046	4	Screw, 10-32 x 1.50 pan phil - SS	
D	60067	4	Washer, #10 flat .435/.060 - SS	
E	65799	1	Switch, Phase - 400A 4-pos	
F	60038	4	Nut, M5-.080 nylock, G6	
G	54014B	1	Bracket, phase switch, 4-pos	
H	60041	4	Washer, M5 flat	
J	60167	4	Screw, M5-0.80 x 35 pan phil, G4.8	

EXHAUST & AFTER TREATMENT ASSEMBLY

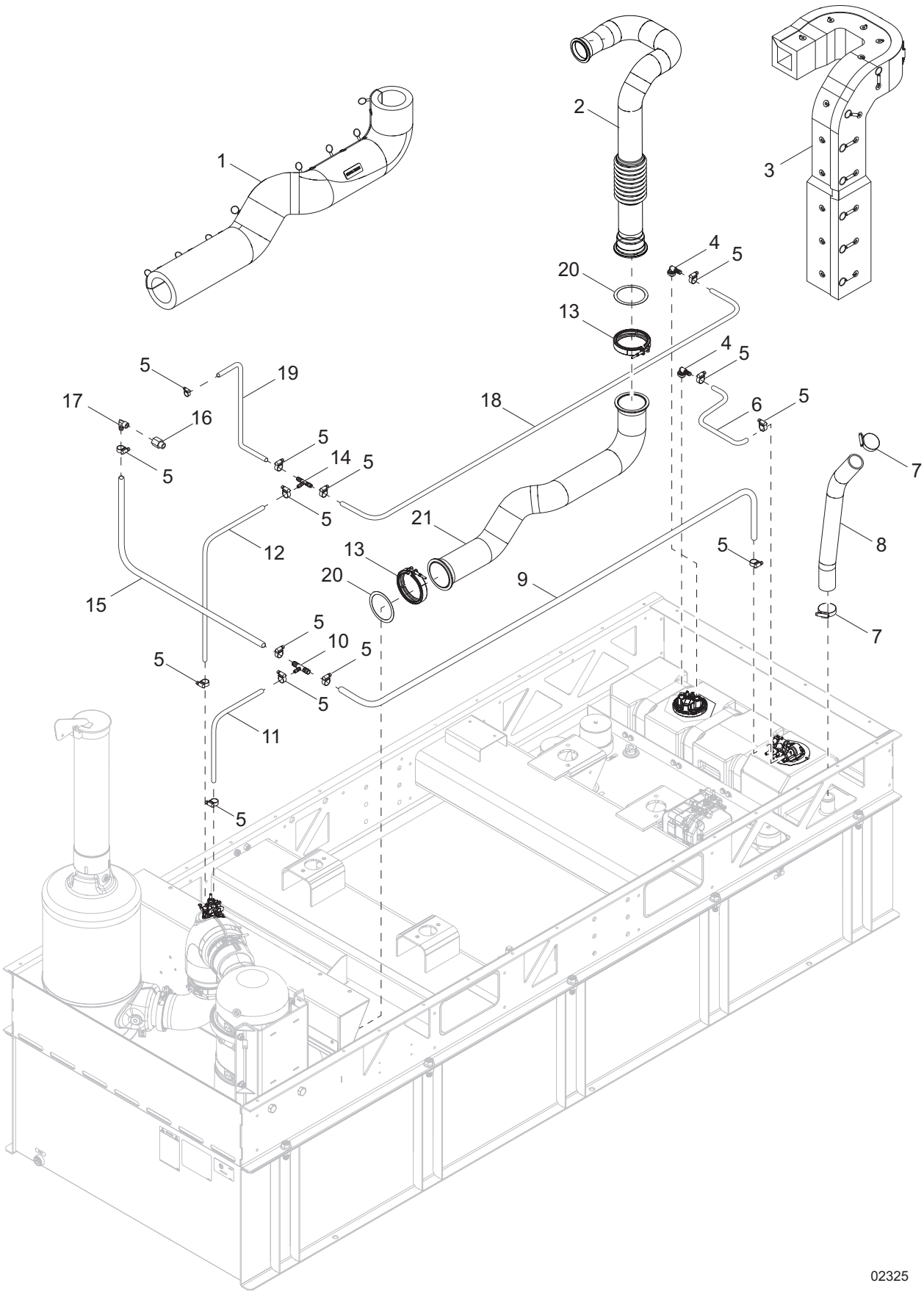

Item	Part No.	Qty	Description	Notes
1	54855	1	Blanket, lower exhaust	
2	55019	1	Pipe, exhaust - upper	
3	55020	1	Blanket, exhaust upper	
4	55085	2	Fitting, 90 degree NG12 x .500 barb	
5	19453	16	Clamp, hose SAE006 (.37-.87)	
6	50206	2.83 ft	Hose, fuel .500ID 35PSI SAE30R7	To aux heater
7	60316	2	Clamp, hose SAE032 (1.56-2.50)	
8	54285	1	Hose, DEF fill	
9	50201	7.3	Hose, .625ID 200PSI	To coolant filter
10	76180	1	T-fitting, T317541	
11	50051	5.0 ft	Hose, fuel .375ID 50PSI SAE30R7	To dosing module
12	50051	5.0 ft	Hose, fuel .375ID 50PSI SAE30R7	
13	31861	2	Clamp, v-band 5.00 DPF	
14	76179	1	T-fitting, T296925	
15	50201	4.2 ft	Hose, .625ID 200PSI	To engine
16	19307	1	Fitting, strt .500FNPT x M22 x 1.50	
17	61014	1	Fitting, 90 degree .500MNPT x .625 barb - brass	
18	50206	9.0 ft	Hose, fuel .500ID 35PSI SAE30R7	To heater
19	50201	3.3 ft	Hose, .625ID 200PSI	To engine
20	33185	2	Gasket, 4.00 exhaust pipe flange	
21	54818	1	Weldment, lower exhaust	

EXHAUST & DEF ASSEMBLY

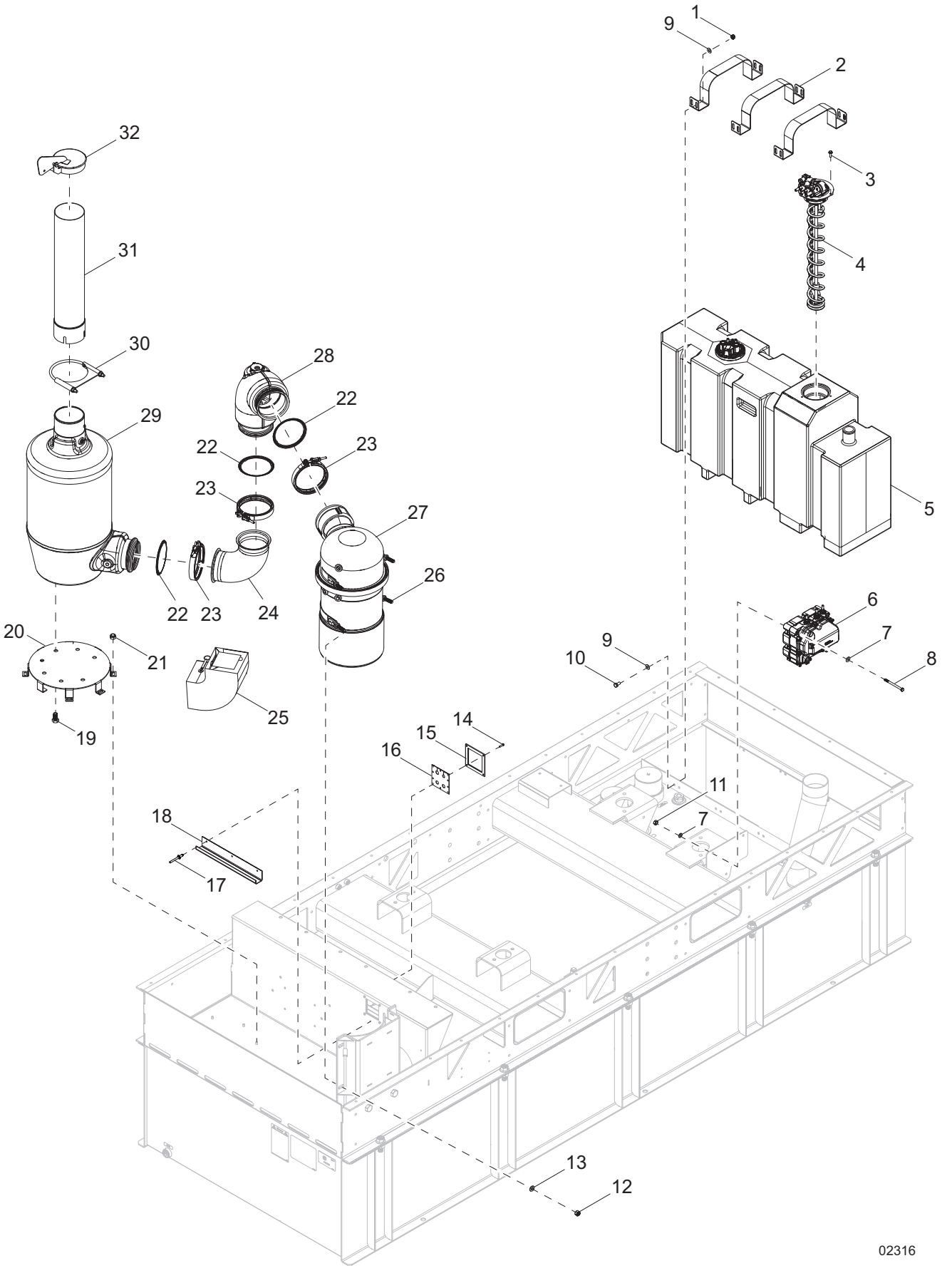

Item	Part No.	Qty	Description	Notes
1	60145	12	Nut, .375-16 sflg lock, G5	
2	56347B	3	Strap, DEF tank	
3	60115	3	Screw, M6-1.00 x 12 slfg hex, G8.8	
4	54234	1	Assembly, DEF header	
5	54021	1	Tank, DEF 25 gallon	
6	53490	1	Supply module	
7	60119	6	Washer, .312 flat .875/.070	
8	60404	3	Screw, .312-18 x 4.00 std hex, G5	
9	60698	24	Washer, .375 flat .875/.040	
10	60295	12	Screw, .375-16 x .750 std hex - SS	
11	60303	3	Nut, .312-18 nylock, G2	
12	60302	4	Screw, M10-1.25 x 60 sflg hex, G10.9	
13	60012	4	Washer, M12 flat	
14	61196	4	Screw, 10-23 x .750 std hex - SS	
15	54926B	1	Clamp plate, bulkhead DEF	
16	51466	1	Bulkhead, DEF - rubber	
17	60268	3	Rivet, .188 dia x .126 to .250 grip	
18	54768B	1	Gutter, rear door rain	
19	44531	7	Screw, M16-2.00 x 30 std hex, G8.8	
20	10000007665	1	Mount, SCR	
21	60095	6	Nut, .312-18 sflg	
22	33231	3	Gasket, 5.00 exhaust DPF flange	
23	10000011754	3	Clamp, V-band - Deere RE540348	
24	53684	1	Elbow, SCR	
25	54785	1	Blanket, insulated exhaust elbow	
26	54243	2	Strap, DOC - large	
27	53487	1	Module, DOC	
28	53787	1	Tube, decomp	
29	53488	1	Module, SCR	
30	27177	1	Clamp, muffler 5.00	
31	53683	1	Pipe, exhaust	
32	21096	1	Cap, rain 5.00 in	

SKID AND FUEL TANK ASSEMBLY

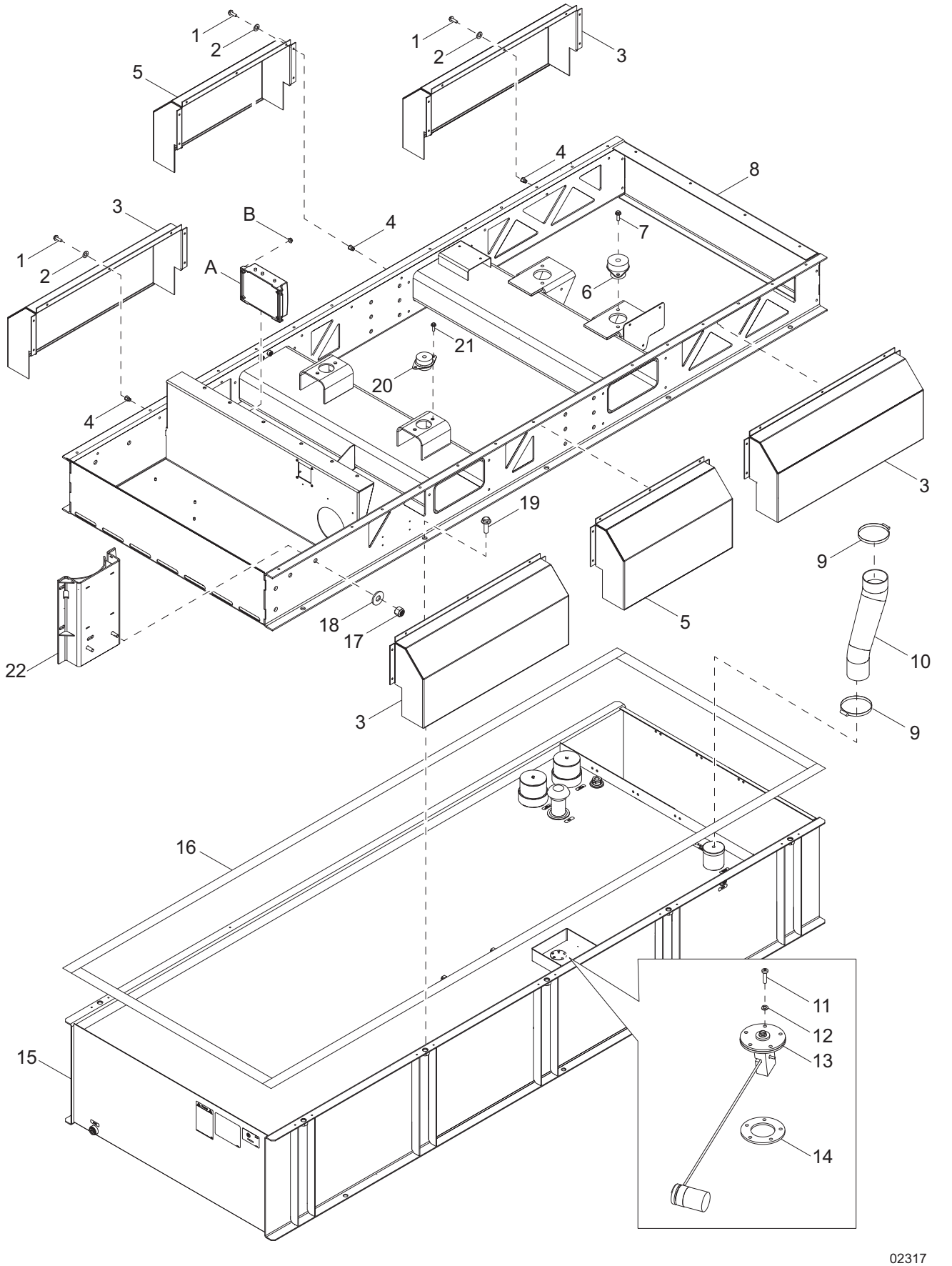

Item	Part No.	Qty	Description	Notes
1	68070	42	Screw, .250-20 x .1.0 button hex, SS	
2	60704	42	Washer, .250 split lock, SS	
3	54692B	4	Panel, rain guard - side	
4	56551	42	Insert, .250-20 splined .165-.260, threaded	
5	54695B	2	Panel, rain guard - mid side	
6	53377	2	Isolator, rubber - 1500/1000	
7	60408	4	Screw, M10-1.50 x 30 std hex, G8.8	
8	51764B	1	Weldment, mini skid	
9	19842	2	Clamp, hose - SAE072 (4.06-5.00)	
10	54008	1	Hose, fuel	
11	60062	5	Screw, 10-32 x .750 pan phil, G2	
12	60252	5	Washer, #10 split lock	
13	21206	1	Sender, fuel 16-24 in, RH	
14	22323	1	Gasket, fuel sender	
15	52252B	1	Tank, fuel - 343 gal, double wall	
16	54922	1	Gasket, 1.00 x .250	
17	60240	2	Nut, .625-11 nylock, G5	
18	60521	2	Washer, .625 flat 1.743/.108	
19	63111	10	Screw, .750-10 x 2.25 flg hex, G8	
20	52671	2	Isolator, rubber - 680/1020	
21	62259	4	Screw, M10-1.50 x 30 sflg hex, G10.9	
22	54812BH	1	Weldment, DOC bracket	
OPTIONAL FEATURES				
Battery Charger:				
A	66212	1	Charger, battery 2-5A/1-10A, 3 stage, 2 output	
B	61045	4	Nut, 10-32 sflg	

TRAILER ASSEMBLY

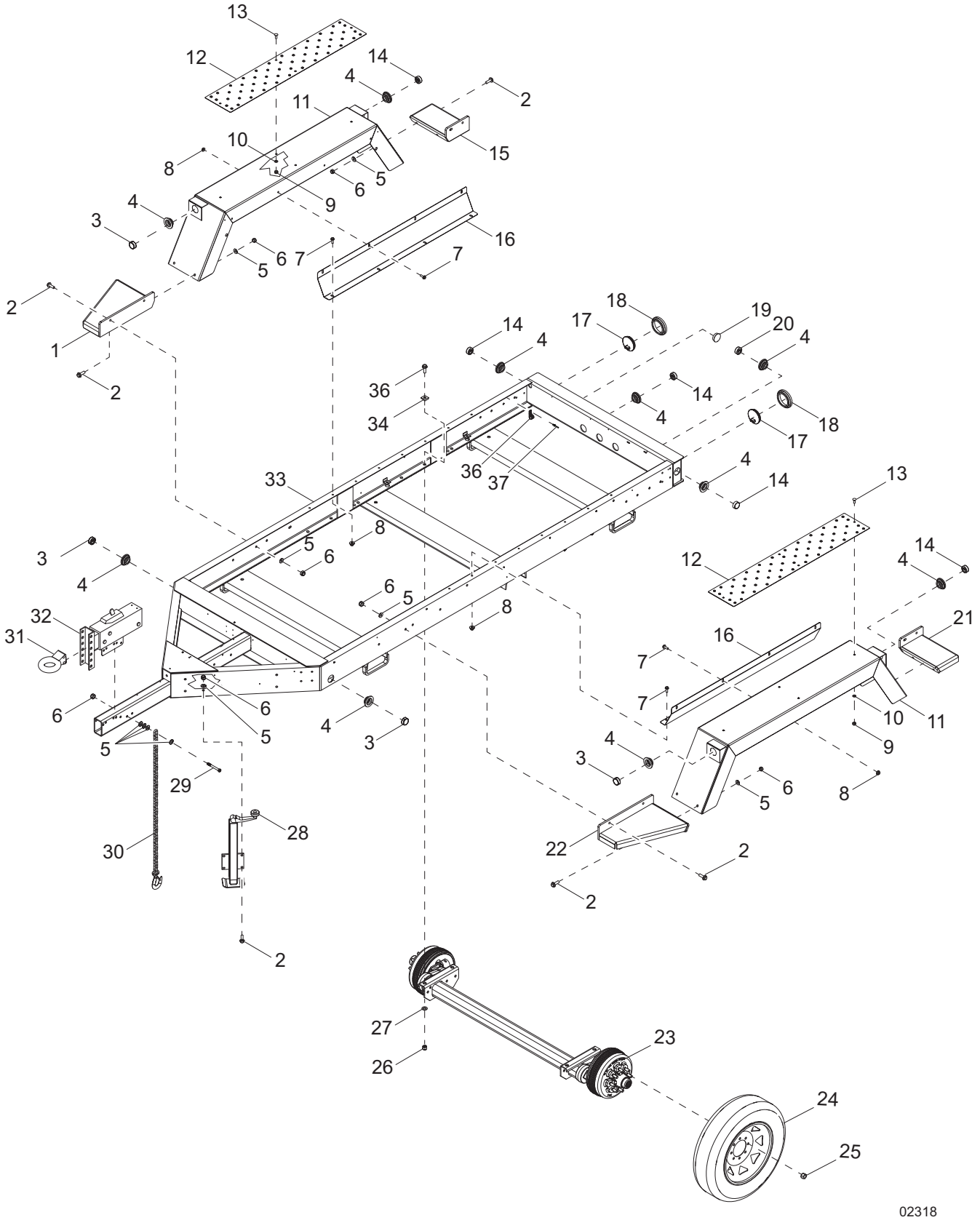

Item	Part No.	Qty	Description	Notes
1	22360B	1	Weldment, front step -RH	
2	61103	20	Screw,500-13 x 1.75 sflg hex	
3	66702	4	Light, clearance 2.0” LED - amber	
4	66394	14	Grommet, sealed beam light 2.0” - rubber	
5	60416	28	Washer, .500 flat .375/.090	
6	62221	22	Nut, .500-13 nylock, G5	
7	60517	16	Screw, .375-16 x 1.00 sflg hex	
8	60145	16	Nut, .375-16 sflg, G5	
9	60358	8	Nut, .375-16 nylock, G5	
10	60698	8	Washer, .375 flat .875/.040 - SS	
11	54212B	2	Weldment, fender, large trailer	
12	54215	2	Plate, anti-skid - diamond plate	
13	60790	8	Screw, .375-16 x 1.00 carriage - SS	
14	66703	7	Light clearance 2.0” LED - red	
15	22358B	1	Weldment, rear step -RH	
16	22351B	2	Shield, fender - large trailer	
17	10221	2	Grommet, rear light 4.50” - rubber	
18	66701	2	Light, stop/tail/turn 4.0” LED	
19	62161	1	Plug, hole 2.25 dia. - black	
20	66704	1	Light, utility 2.0” LED - clear	
21	22357B	1	Weldment, rear step - LH	
22	22359B	1	Weldment, front step -LH	
23	56488	2	Axle, 8000 lb. 57.0” frame hydraulic brakes	
24	24072B	4	Wheel, ST215/75R7.5 - black	
25	61056	32	Nut, .625-18 lug 90º	
26	60240	8	Nut, .625-11 nylock, G5	
27	60193	8	Washer, M16 flat	
28	27318B	1	Weldment, jack - large trailer	
29	60376	2	Screw, 500-13 x 4.50 hex, G5	
30	20159	2	Chain, trailer safety - .375” hi test	
31	19335B	1	Coupler, lunette ring 3.0 ID - adjustable	
32	18373	1	Actuator, trailer	
33	27655B	1	Weldment, trailer frame	
34	60651	8	Washer, square bevel .626 gauge	
35	61078	8	Screw, .625-11 x 2.00 flg hex, G8	
36	16143	12	Clamp, tubing .500	
37	61155	12	Rivet, .188 dia x .438-.750 grip	
--	24101	4	Ring, retaining	w/one lug each tire

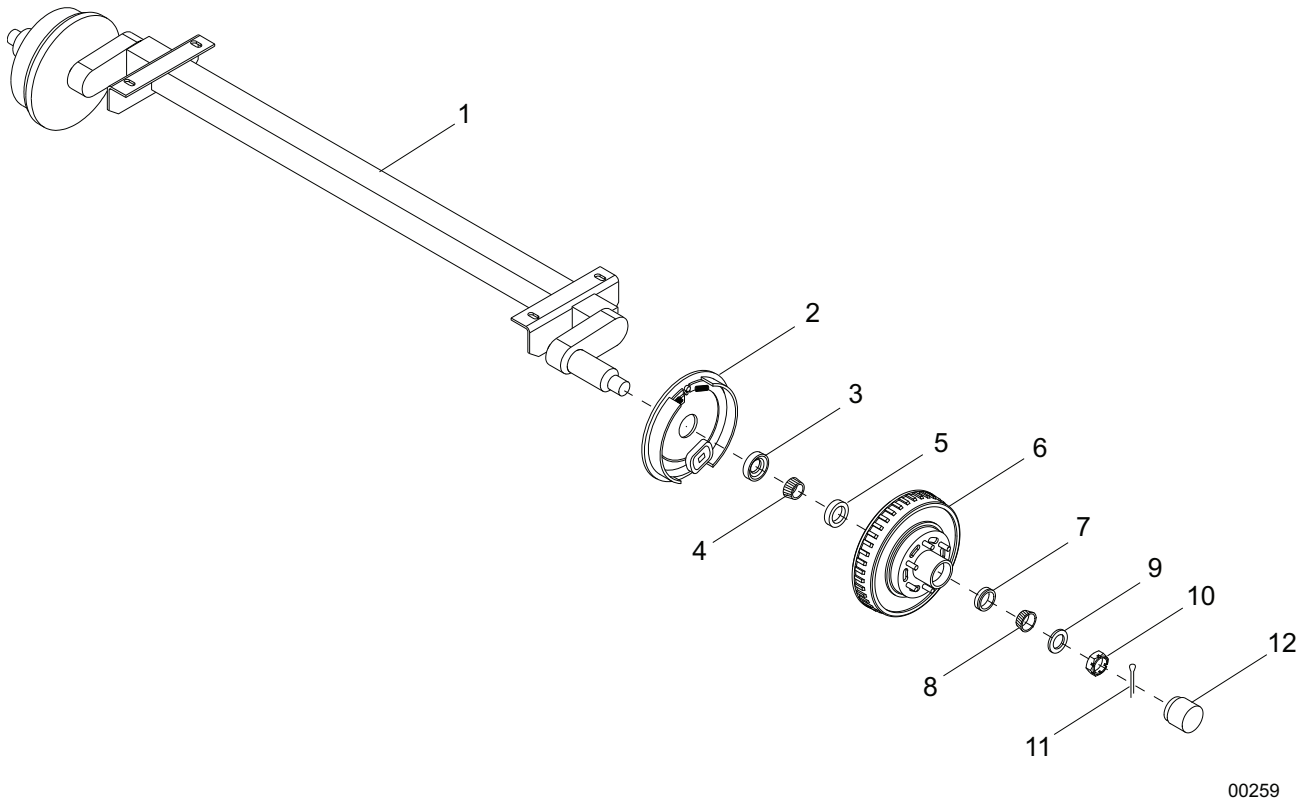
1
2
3
4
5
6
7
8
9
10
11
12
00259

Item	Part No.	Qty	Description	Notes
1	56488	1	Axle, 8000 lb. hydraulic	
2	10000015356	2	Brake shoe - LH (8000 lb)	
--	10000015359	2	Brake shoe - RH (8000 lb)	
3	10000015357	2	Seal - 8000 lb	
4	10000015367	2	Inner bearing cone - 8000 lb	
5	10000015378	2	Inner bearing cup - 8000 lb	
6	10000015319	2	Hub - 8000 lb	
7	10000015391	2	Outer bearing cup - 8000 lb	
8	10000015358	2	Outer bearing cone - 8000 lb	
9	10000015347	2	Spindle washer - 8000 lb	
10	10000015400	2	Spindle nut - 8000 lb	
11	26833	4	Cotter pin, 8000 lb	
12	26835	4	Grease cap, 8000 lb	

BRAKE LINE ASSEMBLY

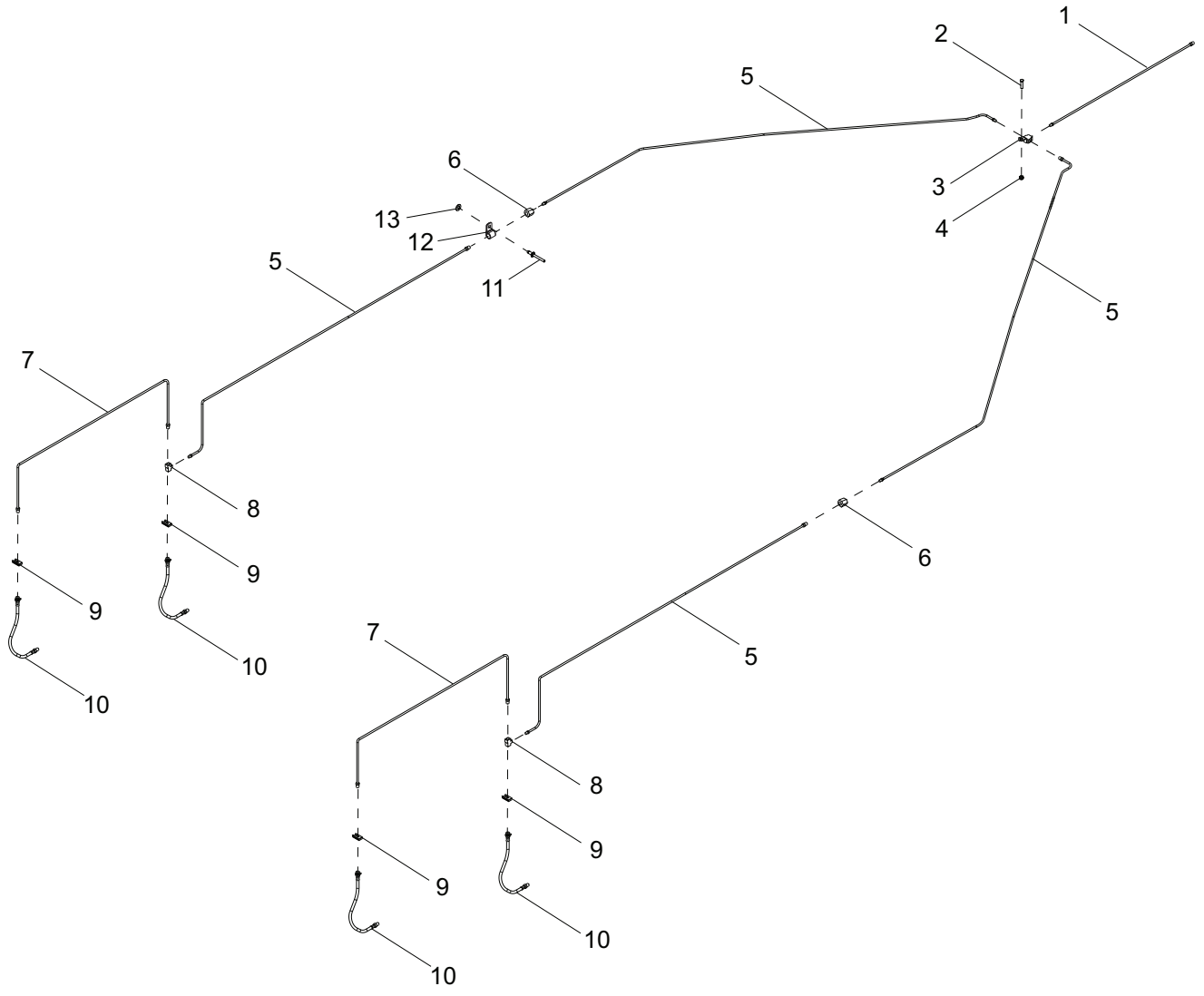

Item	Part No.	Qty	Description	Notes
1	40495	1	Line, brake - .188 x 20.0	
2	60684	1	Screw, .250-20 x .875 std. hex, SS	
3	19252	1	Fitting, strt - .188 brake line T w/bracket - female	
4	60144	1	Nut, .250-20 nylock, G5	
5	22338	4	Line, brake - .188 x 60.0	
6	22339	2	Fitting, strt - .188 brake line coupler	
7	40493	2	Line, brake - .188 x 40.0	
8	40498	2	Fitting, strt - .188 brake line T - male/female/male	
9	40499	4	Clip, brake hose	
10	40497	4	Hose, brake - .188 x 20.0 - male/female	
11	60231	12	Rivet, .188 dia. x .375 to .500 grip	
12	61010	12	Clamp, tubing - .375 heavy duty	
13	60237	12	Washer, #10 flat .495/.036	

RECOMMENDED SPARE PARTS LIST

ENGINE

Alternator	32910
Belt, fan	10000012588
Filter, air	54881
Filter, fuel	10000012614
Filter, fuel - secondary	10000012614
Filter, oil	32245
Hose, radiator - lower	53628
Hose, radiator - upper	53627
Starter	10000016898

ELECTRICAL

Breaker, main	65354
Breaker, 20A	18091
Breaker 50A	18092
Controller, programmed	32979
Receptacle, 120V/20A GFI	14130
Receptacle, 240V/50A twist lock	18089
Relay	66340
Sender, fuel	21206
Sensor, low coolant	68206
Switch, E-stop assembly	65470
Switch, rocker	66996
Switch, trigger safety	12632

TRAILER

Chain, safety	20159
Jack, side wind (rear)	41133
Jack, top wind (tongue)	27318B

Part No. 10000014965 Rev. A 06/2017
©2017 Generac Power Systems, Inc.
All rights reserved
Specifications are subject to change without notice.
No reproduction allowed in any form without prior written consent from Generac Power Systems, Inc.

GENERAC®
MAGNUM

Generac Mobile Products
215 Power Drive, Berlin, WI 54923
GeneracMobileProducts.com | 800-926-9768 | 920-361-4442