GENERAC® | MAGNUM

# MDG150DF4

## Diesel Generator Parts Manual

*S/N 3002692330 and after*

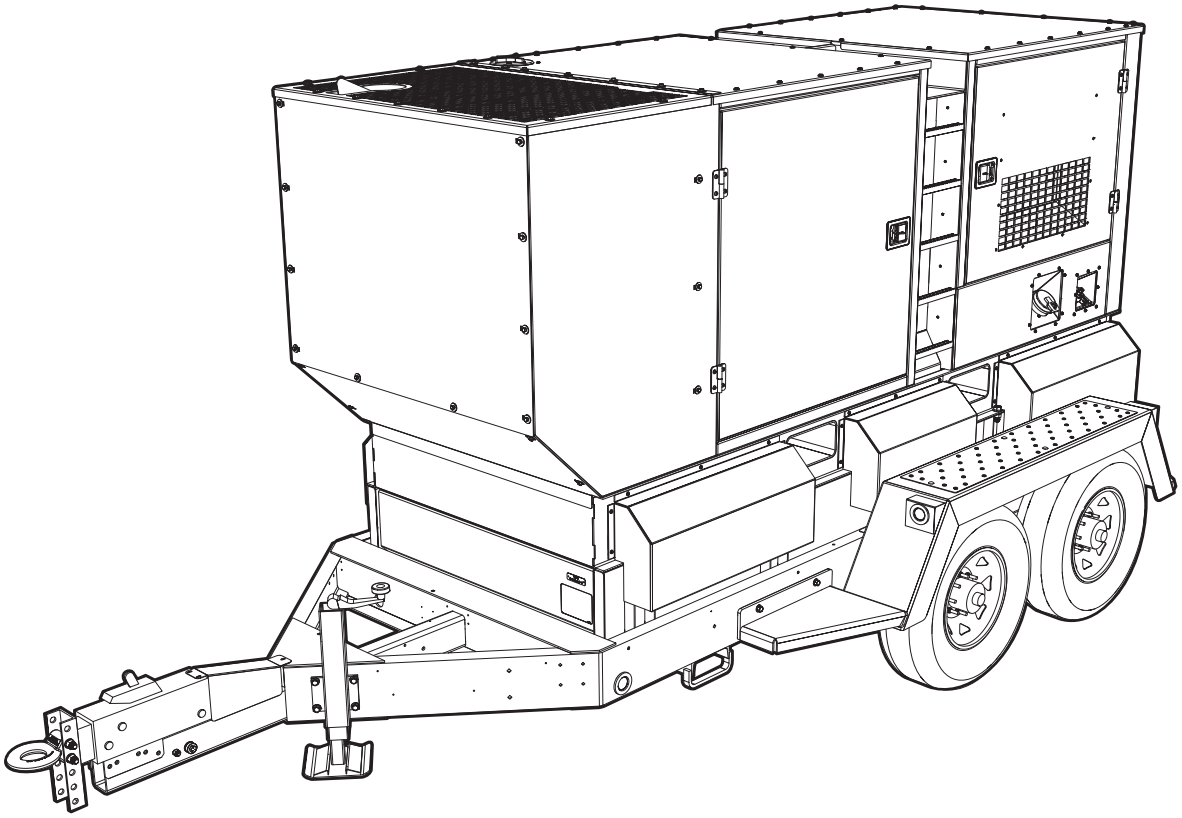

02419

**MODEL NUMBER** _____

**SERIAL NUMBER:** _____

**DATE PURCHASED:**_____

SAVE THIS MANUAL FOR FUTURE REFERENCE

**⚠WARNING**

Breathing diesel engine exhaust exposes you to chemicals known to the State of California to cause cancer and birth defects or other reproductive harm.

- Always start and operate the engine in a well-ventilated area.
- If in an enclosed area, vent the exhaust to the outside.
- Do not modify or tamper with the exhaust system.
- Do not idle the engine except as necessary.

For more information go to www.P65Warnings.ca.gov/diesel. (000394)

# Introduction

This parts manual was prepared based on the information available at the time of publication and is subject to change without notice. Generac Mobile Products reserves the right to change parts at any time. To check whether a revised parts manual is available, contact Generac Mobile Products.

DO NOT MODIFY or use this equipment for any application other than which it was designed for. To keep your equipment fully operational, it is suggested you maintain a stock of commonly used maintenance or service parts. A recommended spare parts list can be found in the back of this manual. To order service parts, please go to **www.generacmobilepoducts.com** or call Generac Mobile Products.

**⚠WARNING**

Consult Manual. Read and understand manual completely before using product. Failure to completely understand manual and product could result in death or serious injury. (000100a)

**⚠WARNING**

Environmental Hazard. Always recycle batteries at an official recycling center in accordance with all local laws and regulations. Failure to do so could result in environmental damage, death or serious injury. (000228)


## GENERAC MOBILE PRODUCTS LLC

**215 Power Drive • Berlin, WI 54923 U.S.A.**
**Phone: 920-361-4442**
**FAX: 920-361-4416**
**Toll Free: 1-800-926-9768**
**www.generacmobileproducts.com**


**For technical or parts QUESTIONS, contact Generac Mobile Products Technical Service at 1-800-926-9768.**

Engine Make:_____
Engine Serial Number:_____
Engine Model Number: _____

# Table of Contents


Introduction ..... iii
- General Information ..... 1
- Unit Decals - Exterior ..... 2
- Unit Decals - Interior ..... 4
- Unit Decals - Control Panel ..... 6
- Unit Decals - Power Panel ..... 8
- Enclosure Panels ..... 10
- Roof and Doors to Unit ..... 12
- Enclosure Frame Assembly ..... 14
- Front Enclosure Assembly ..... 16
- Door Assembly - Controls - Top and Bottom ..... 18
- Door Assembly - Rear Left ..... 20
- Door Assembly - Rear ..... 22
- Door Assembly - Front Left ..... 24
- Door Assembly - Front Right ..... 26
- Fuel Panel Assembly ..... 28
- Receptacle / E-stop Panel Assembly ..... 30
- Receptacle Panel Assembly ..... 32
- Control Panel Door Assembly ..... 34
- Control Panel Assembly (2 of 2) ..... 36
- Control Panel Assembly (1 of 2) ..... 38
- Breaker/Lug Box Assembly ..... 40
- Breaker and Lug Assembly ..... 42
- Air Filter Assembly ..... 44
- Cooling System Assembly ..... 46
- Cooling System Hoses ..... 48
- Lift Structure ..... 50
- Engine and Generator To Unit ..... 52
- Engine Block Heater (If Equipped) ..... 54
- Engine Assembly ..... 56
- Generator Assembly ..... 58
- Exhaust & After Treatment Assembly ..... 60
- Exhaust Support & DEF Assembly ..... 62
- Skid and Fuel Tank Assembly ..... 64
- Trailer Assembly ..... 66
- Axle Assembly ..... 68
- Brake Line Assembly ..... 70
- Recommended Spare Parts - Engine and Service Kits ..... 72
- Recommended Spare Parts - Electrical and Trailer ..... 74

# General Information

Products supplied may vary from the illustrations in this parts manual. Parts not shown in the illustration are indicated by a double dash (--) in the item column.

When ordering replacement parts, be prepared to provide the model number, serial number, part number, purchase order number (if required), customer ID, shipping address and desired shipping method.

***Note:*** *Illustrated below are the unit identification tag and the VIN rag. These tags contain the model number, serial number, vehicle identification number (VIN) and tire loading information.*

*UNIT ID Tag*

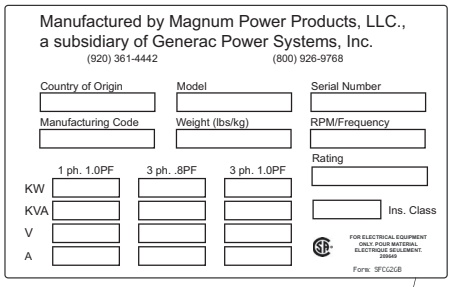


*Located on control panel (behind door)*

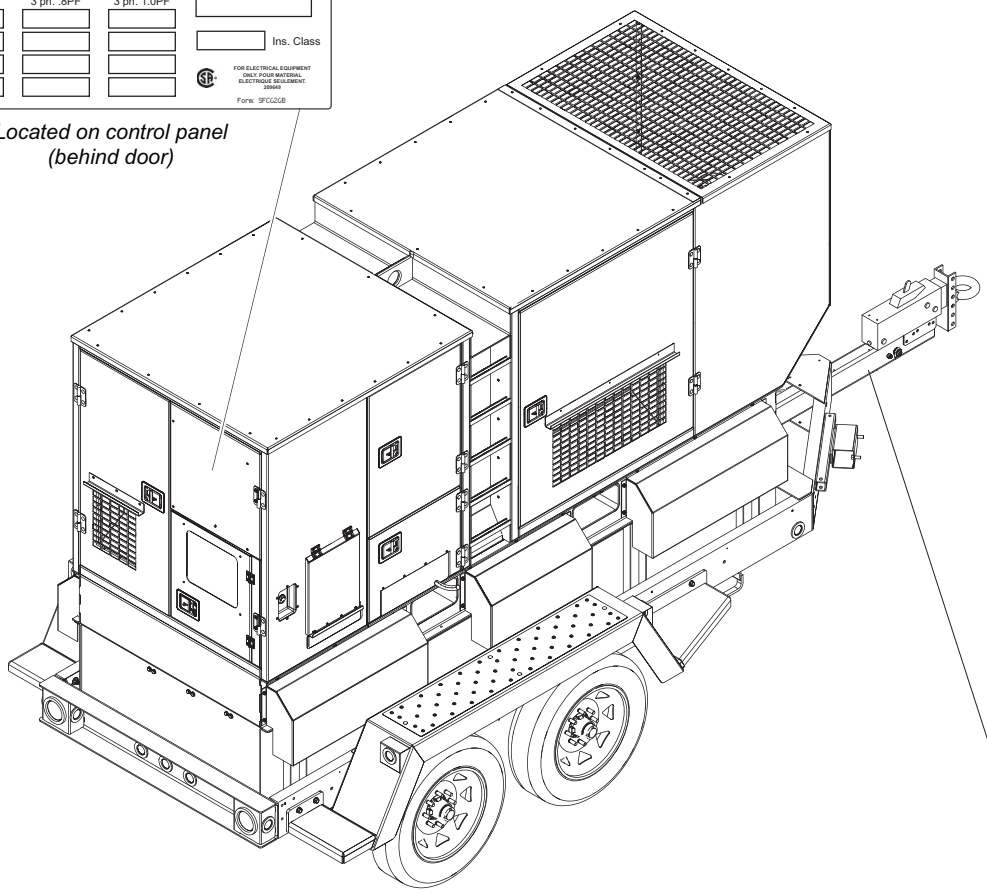

*VIN Tag*

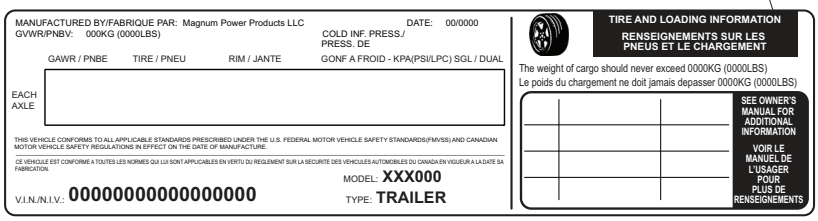


02288

# UNIT DECALS - EXTERIOR

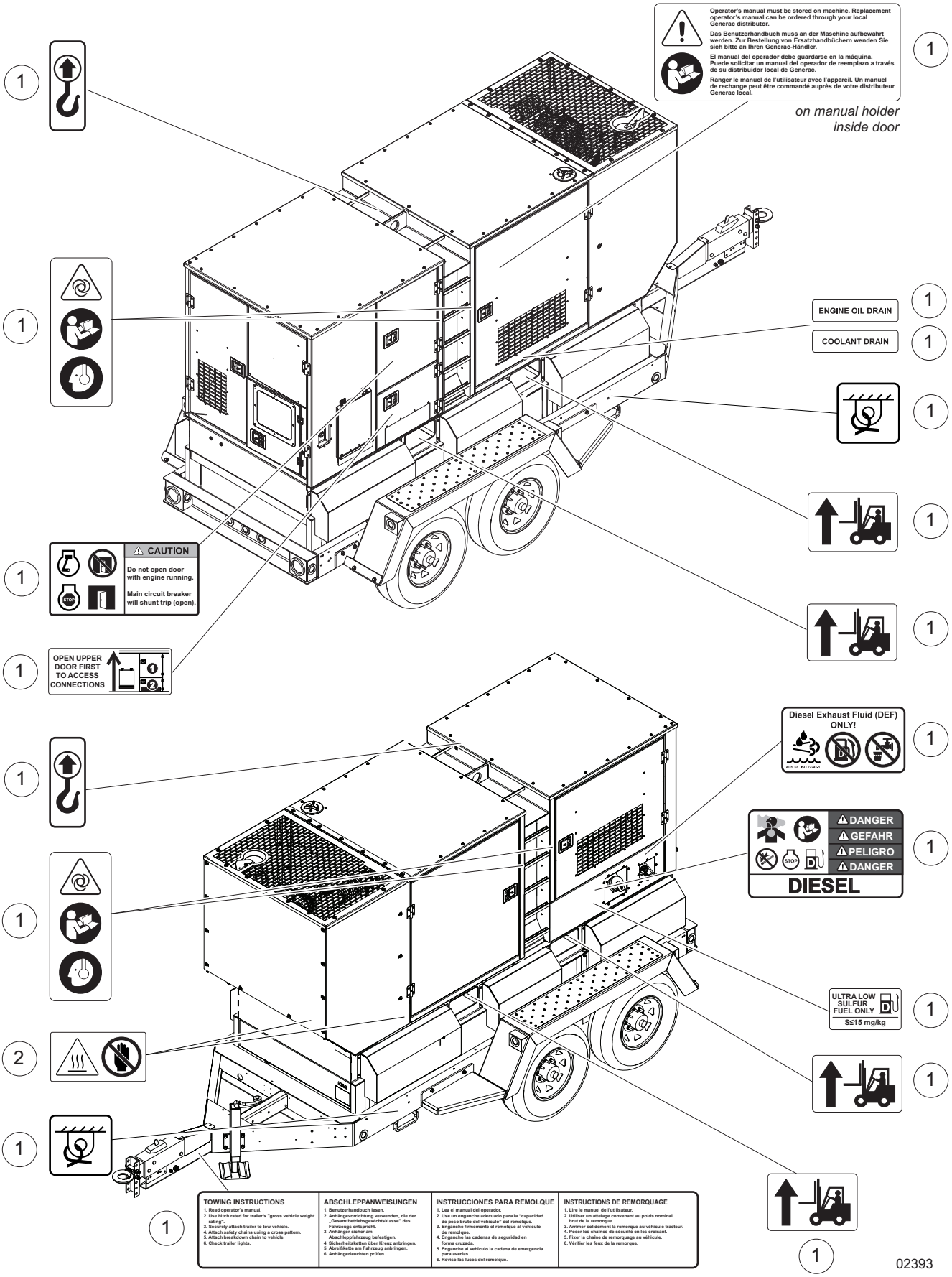

| Item | Part No. | Qty | Description | Notes |
|---|---|---|---|---|
| 1 | 51551 | 1 | Decal set, safety | |
| 2 | 51552 | 2 | Decal, high temp warning | |

# UNIT DECALS - INTERIOR

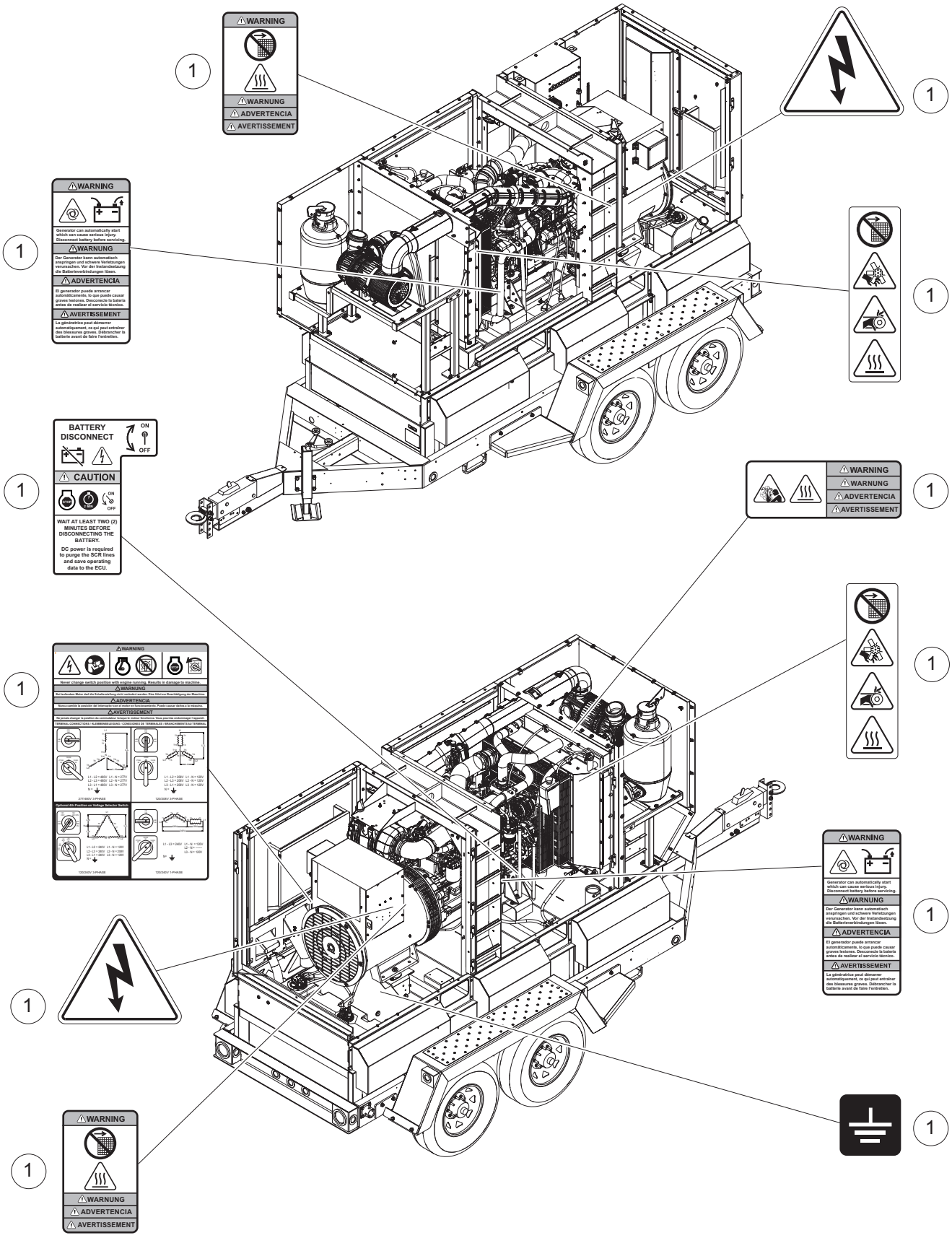

| Item | Part No. | Qty | Description | Notes |
|---|---|---|---|---|
| 1 | 51551 | 1 | Decal set, safety | |

# UNIT DECALS - CONTROL PANEL

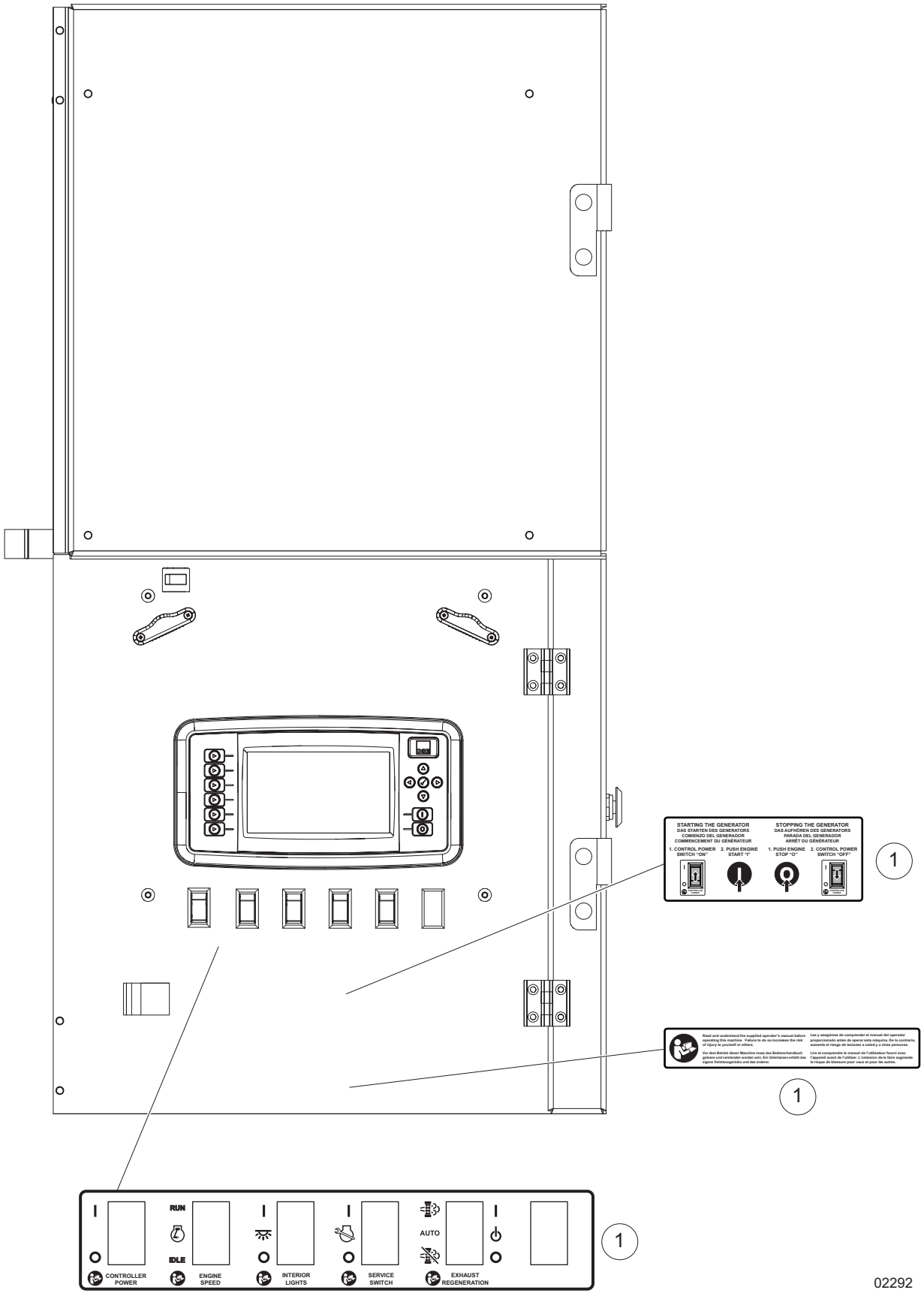

| Item | Part No. | Qty | Description | Notes |
|---|---|---|---|---|
| 1 | 51550 | 1 | Decal set, controls | |

# UNIT DECALS - POWER PANEL

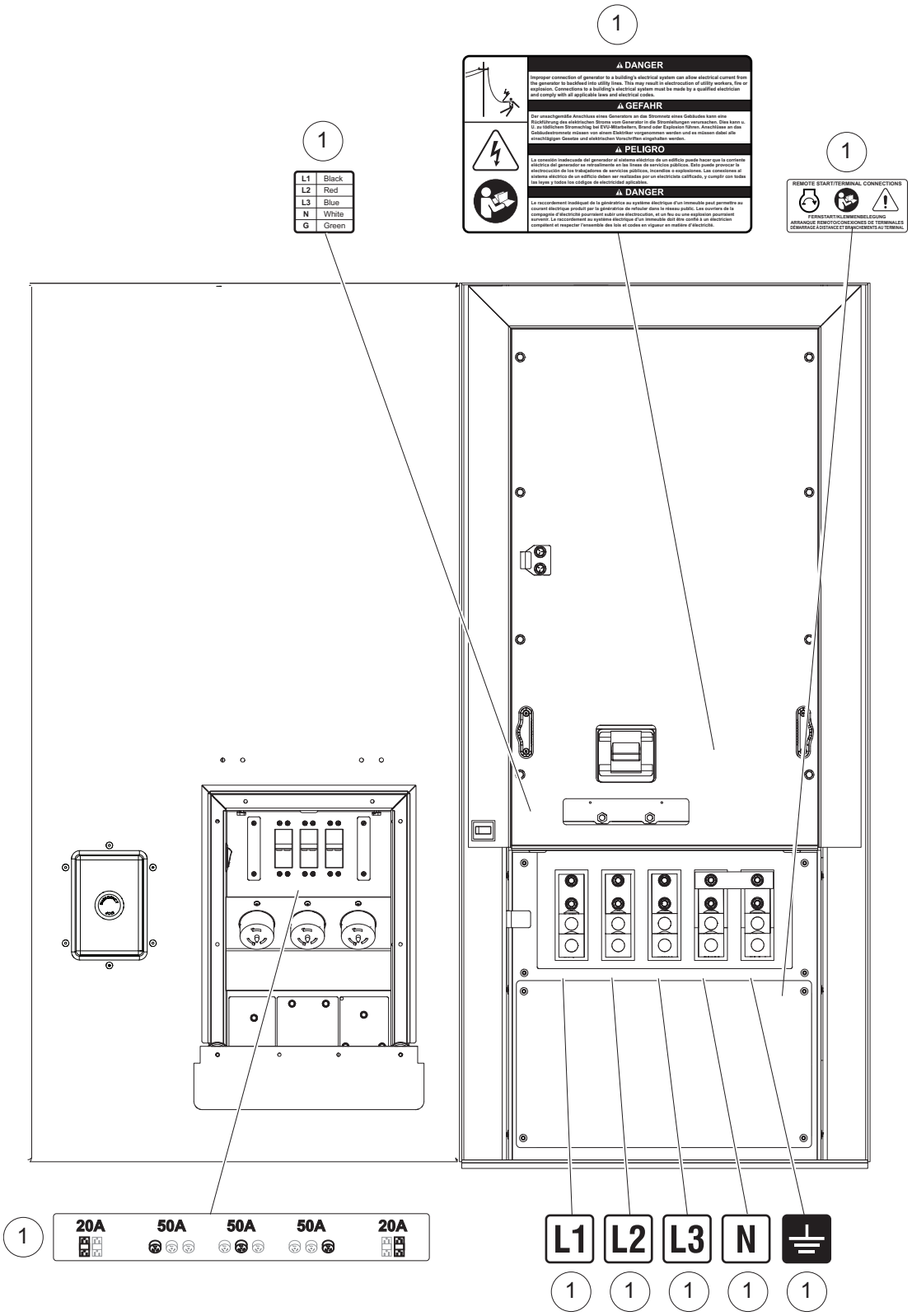


02329

| Item | Part No. | Qty | Description | Notes |
|---|---|---|---|---|
| 1 | 51551 | 1 | Decal set, safety | |

# ENCLOSURE PANELS

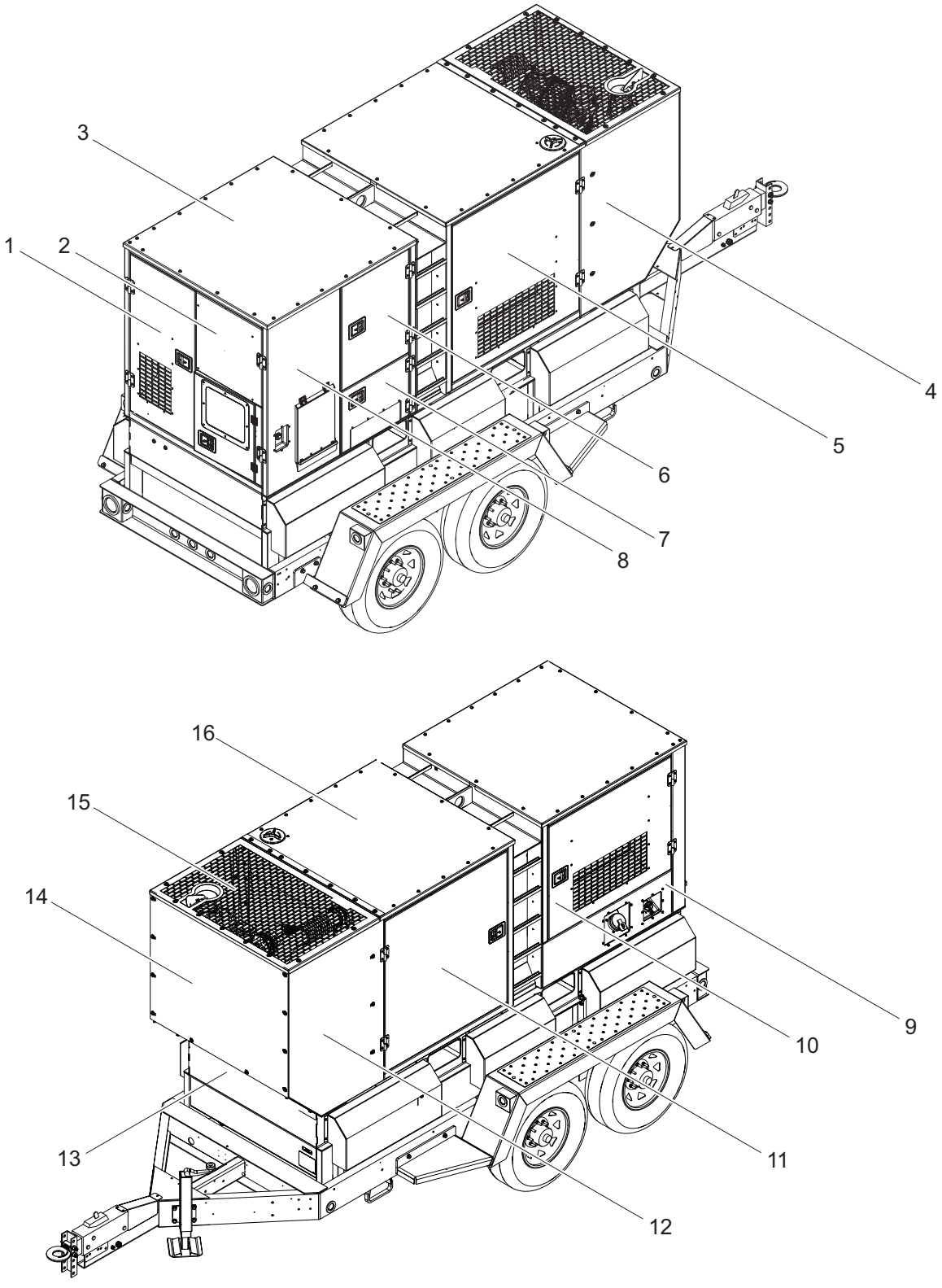

| Item | Part No. | Qty | Description | Notes |
|---|---|---|---|---|
| 1 | 10000018236 | 1 | Assembly, rear door | *Page 22* |
| 2 | 10000017497 | 1 | Assembly, controls door | *Page 34* |
| 3 | 10000018574 | 1 | Panel, top plate - back | *Page 12* |
| 4 | 10000023551 | 1 | Assembly, front panel - right | *Page 16* |
| 5 | 10000016301 | 1 | Assembly, front door - right | *Page 26* |
| 6 | 10000017429 | 1 | Assembly, control door - top | *Page 18* |
| 7 | 10000017467 | 1 | Assembly, control door - bottom | *Page 18* |
| 8 | 10000018322 | 1 | Assembly, receptacle / e-stop panel | *Page 30* |
| 9 | 10000023506 | 1 | Assembly, fuel panel | *Page 28* |
| 10 | 10000018133 | 1 | Assembly, rear door - left | *Page 20* |
| 11 | 10000016216 | 1 | Assembly, front door - left | *Page 24* |
| 12 | 10000023525 | 1 | Assembly, front panel - left | *Page 16* |
| 13 | 10000023508 | 1 | Assembly, front access panel | *Page 16* |
| 14 | 10000023519 | 1 | Assembly, front panel | *Page 16* |
| 15 | 10000019010 | 1 | Panel, roof - fwd | *Page 12* |
| 16 | 10000018537 | 1 | Panel, top cover - front | *Page 12* |

# ROOF AND DOORS TO UNIT

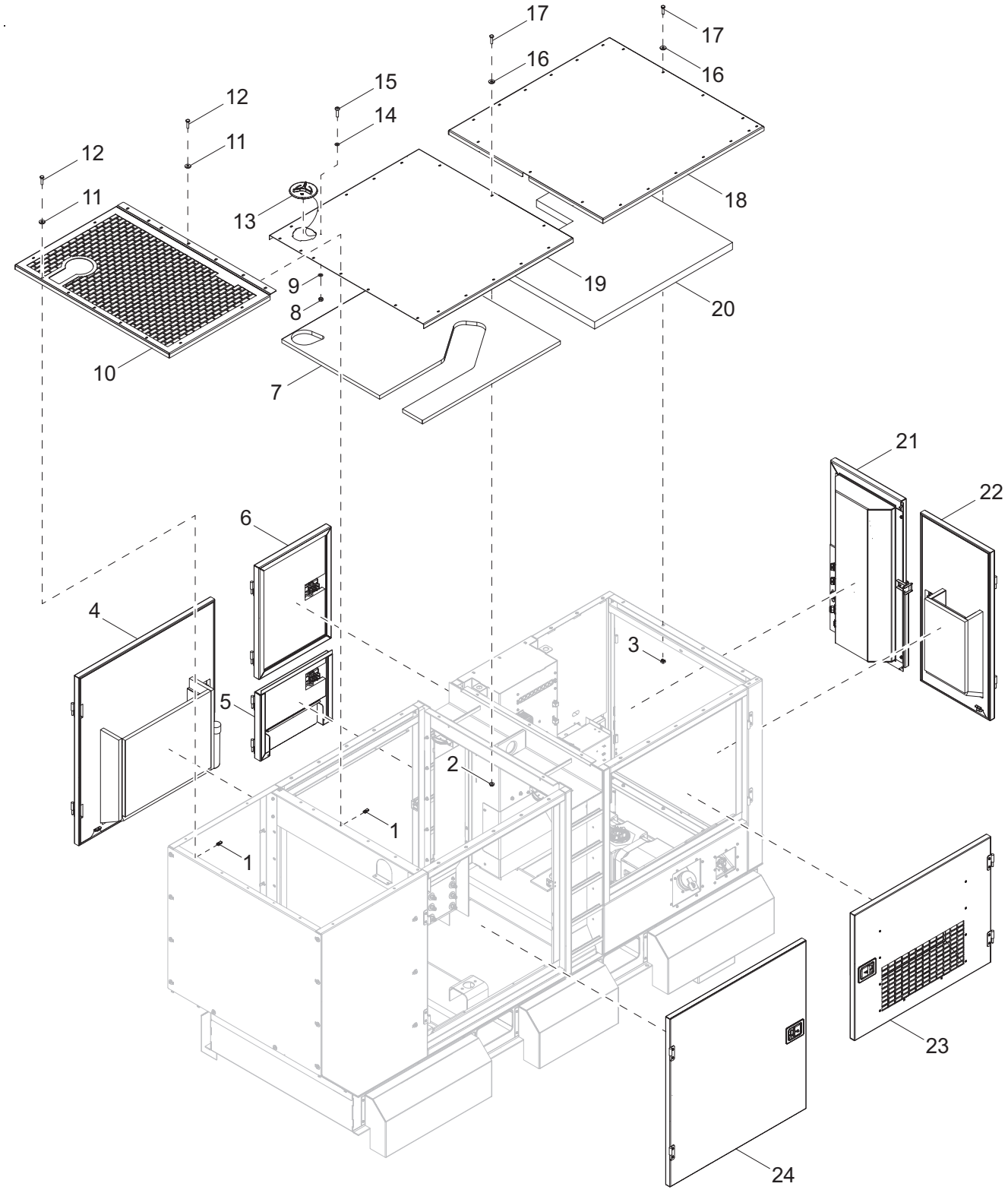

| Item | Part No. | Qty | Description | Notes |
|---|---|---|---|---|
| 1 | 60505 | 16 | Nut, .312-18 u-clip - long type | |
| 2 | 60161 | 6 | Nut, .250-20 serrated flange, G5 | |
| 3 | 15424 | 27 | Nut, .250-20 cage, G5 | |
| 4 | 10000023613 | 1 | Assembly, front door - curbside | |
| 5 | 10000017475 | 1 | Assembly, control door - bottom | |
| 6 | 10000017429 | 1 | Assembly, control door - top | |
| 7 | 10000023526 | 1 | Foam, front roof panel | |
| 8 | 60061 | 1 | Nut, 10-32 nylock | |
| 9 | 60067 | 1 | Washer, #10 flat | |
| 10 | 10000019010 | 1 | Panel, front roof | |
| 11 | 60452 | 1 | Washer, .312 flat - bonded rubber | |
| 12 | 60507 | 12 | Screw, .312-18 x 1.00 standard hex - SS | |
| 13 | 0C2634A | 1 | Cover, radiator access | |
| 14 | 61222 | 1 | Washer, #10 sealing | |
| 15 | 60398 | 1 | Screw, 10-32 x .500 pan Phillips | |
| 16 | 10000024181 | 33 | Washer, sealing .275ID 1.00 OD | |
| 17 | 60620 | 33 | Screw, .250-20 x 1.00 standard hex - SS | |
| 18 | 10000018574 | 1 | Panel, roof - rear | |
| 19 | 10000018537 | 1 | Panel, roof - forward | |
| 20 | 10000017494 | 1 | Foam, top back | |
| 21 | 10000017497 | 1 | Assembly, controls door | |
| 22 | 10000023516 | 1 | Assembly, door back - left | |
| 23 | 10000023561 | 1 | Assembly,  door rear- left | |
| 24 | 10000023507 | 1 | Assembly, door front - left | |

# ENCLOSURE FRAME ASSEMBLY

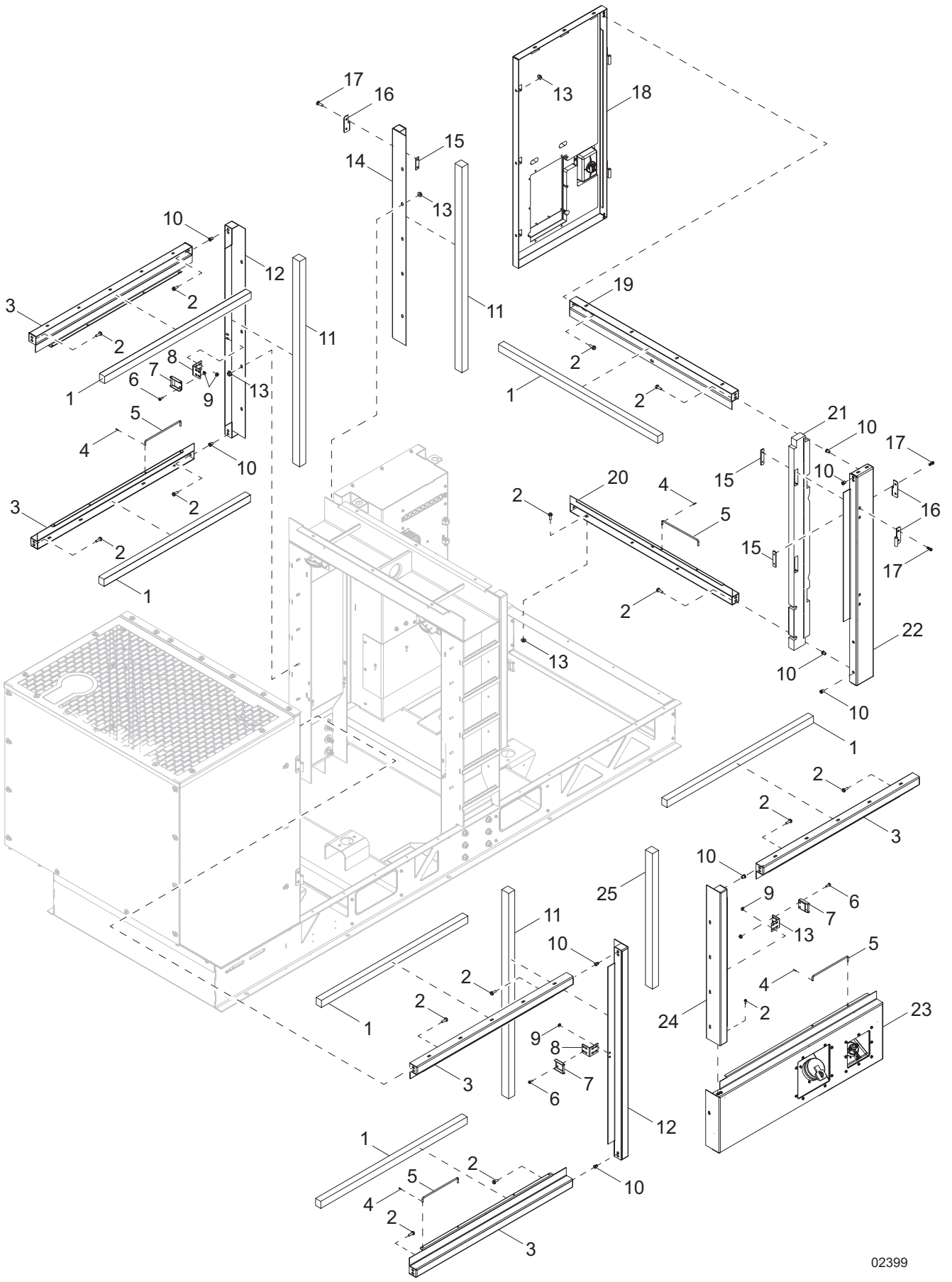

| Item | Part No. | Qty | Description | Notes |
|---|---|---|---|---|
| 1 | 10000023535 | 6 | Foam, spacer panel | |
| 2 | 60616 | 58 | Screw, .312-18 x 1.25 serrated flange hex | |
| 3 | 10000018547 | 5 | Support, top - long | |
| 4 | 60048 | 4 | Pin, roll .125 x .625 | |
| 5 | 18900ZC | 4 | Rod, door prop | |
| 6 | 63358 | 6 | Screw, .250-20 x .625 hex | |
| 7 | 10000013494 | 3 | Weldment, striker | |
| 8 | 10000013491 | 3 | Striker, side angle | |
| 9 | 60161 | 12 | Nut, .250-20 serrated flange, G5 | |
| 10 | 63097 | 16 | Insert, threaded .312-18 hex .027-.150 grip | |
| 11 | 10000023563 | 2 | Foam, door side frame | |
| 12 | 10000019388 | 1 | Panel frame, side | |
| 13 | 60175 | 6 | Screw, .250-20 x .500 serrated flange hex, G5 | |
| 14 | 10000020211 | 1 | Upright, breaker door | |
| 15 | 10000011935 | 12 | Plate, hinge back - threaded | |
| 16 | 18460B | 6 | Hinge, left (female) | |
| 17 | 63346 | 12 | Screw, .312-18 x 1.00 Scytrx- SS | |
| 18 | 10000018322 | 1 | Assembly, receptacle / E-stop panel | |
| 19 | 10000019398 | 1 | Panel frame, top - rear | |
| 20 | 10000019441 | 1 | Panel frame, bottom - rear | |
| 21 | 10000023571 | 1 | Foam, rear panel - left | |
| 22 | 10000018580 | 1 | Panel, rear - left | |
| 23 | 10000023506 | 1 | Assembly, panel - left rear | |
| 24 | 10000018527 | 1 | Panel frame, top - small | |
| 25 | 10000023564 | 1 | Foam, door frame panel | |

# FRONT ENCLOSURE ASSEMBLY

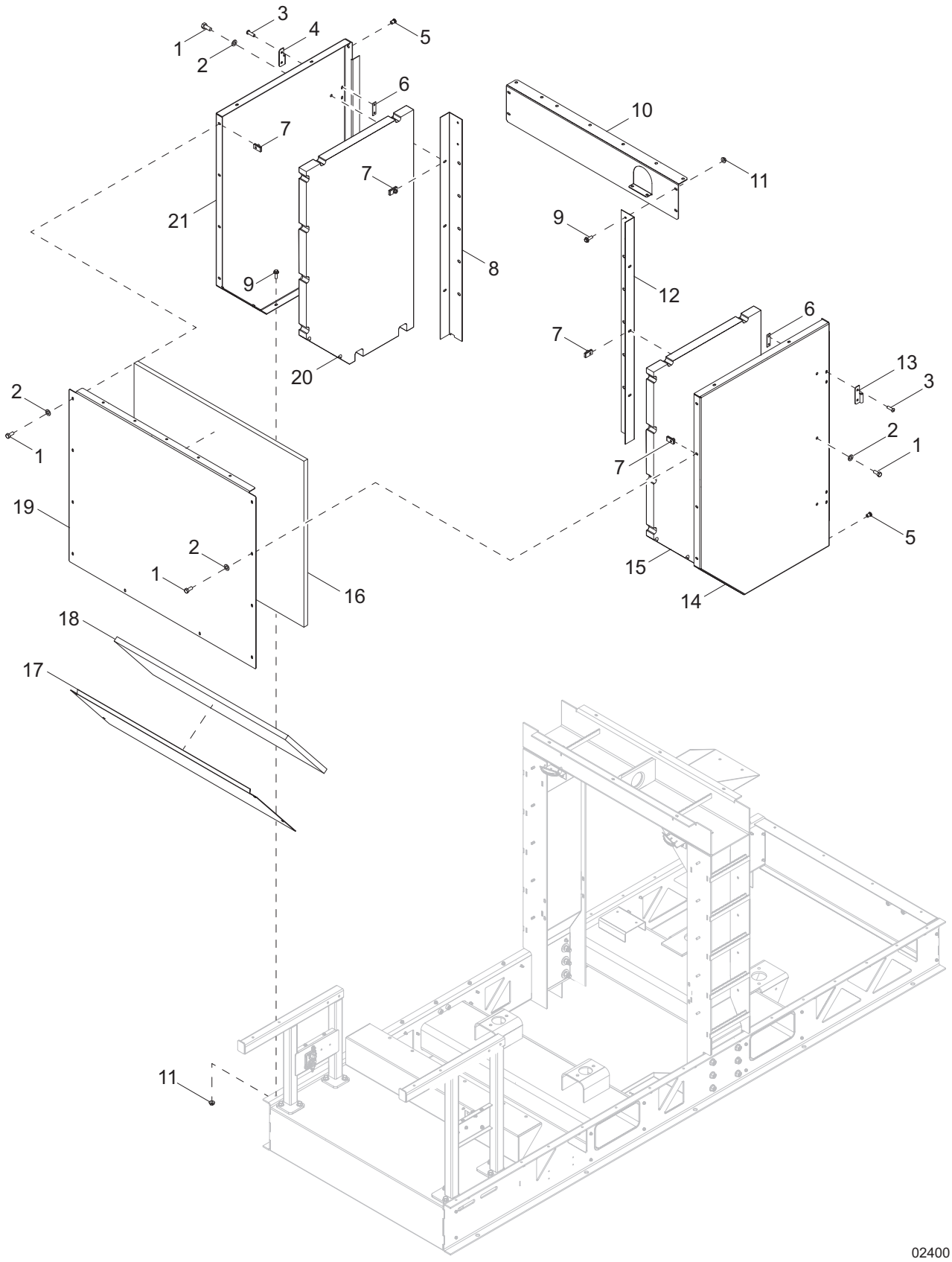

| Item | Part No. | Qty | Description | Notes |
|---|---|---|---|---|
| 1 | 60507 | 16 | Screw, .312-18 x 1.00 standard hex - SS | |
| 2 | 60452 | 16 | Washer, .312 flat w/bonded rubber - SS | |
| 3 | 63346 | 8 | Screw, .312-18 x 1.00 Scytrx - SS | |
| 4 | 18460B | 2 | Hinge, left (female) | |
| 5 | 63097 | 8 | Insert, threaded .312-18 hex .027-.150 grip | |
| 6 | 36672ZC | 4 | Plate, hinge back - threaded | |
| 7 | 60505 | 16 | Nut, .312-18 u-clip - long type | |
| 8 | 1000020195 | 1 | Panel, bulkhead - right | |
| 9 | 60616 | 4 | Screw, .312 x .750 serrated flange hex, G5 | |
| 10 | 10000018539 | 1 | Panel, bulkhead - top | |
| 11 | 60095 | 4 | Nut, .312-18 serrated flange | |
| 12 | 10000020213 | 1 | Panel, bulkhead - left | |
| 13 | 18462B | 2 | Hinge, right (female) | |
| 14 | 10000018991 | 1 | Panel, front - left | |
| 15 | 10000024713 | 1 | Foam, front panel - left | |
| 16 | 10000023553 | 1 | Foam, front panel, | |
| 17 | 10000018934 | 1 | Panel, access | |
| 18 | 10000017580 | 1 | Insulation, heat skid - front | |
| 19 | 10000018974 | 1 | Panel, front | |
| 20 | 10000024543 | 1 | Foam, front panel - right | |
| 21 | 10000018973 | 1 | Panel, front - right | |

# DOOR ASSEMBLY - CONTROLS - TOP AND BOTTOM

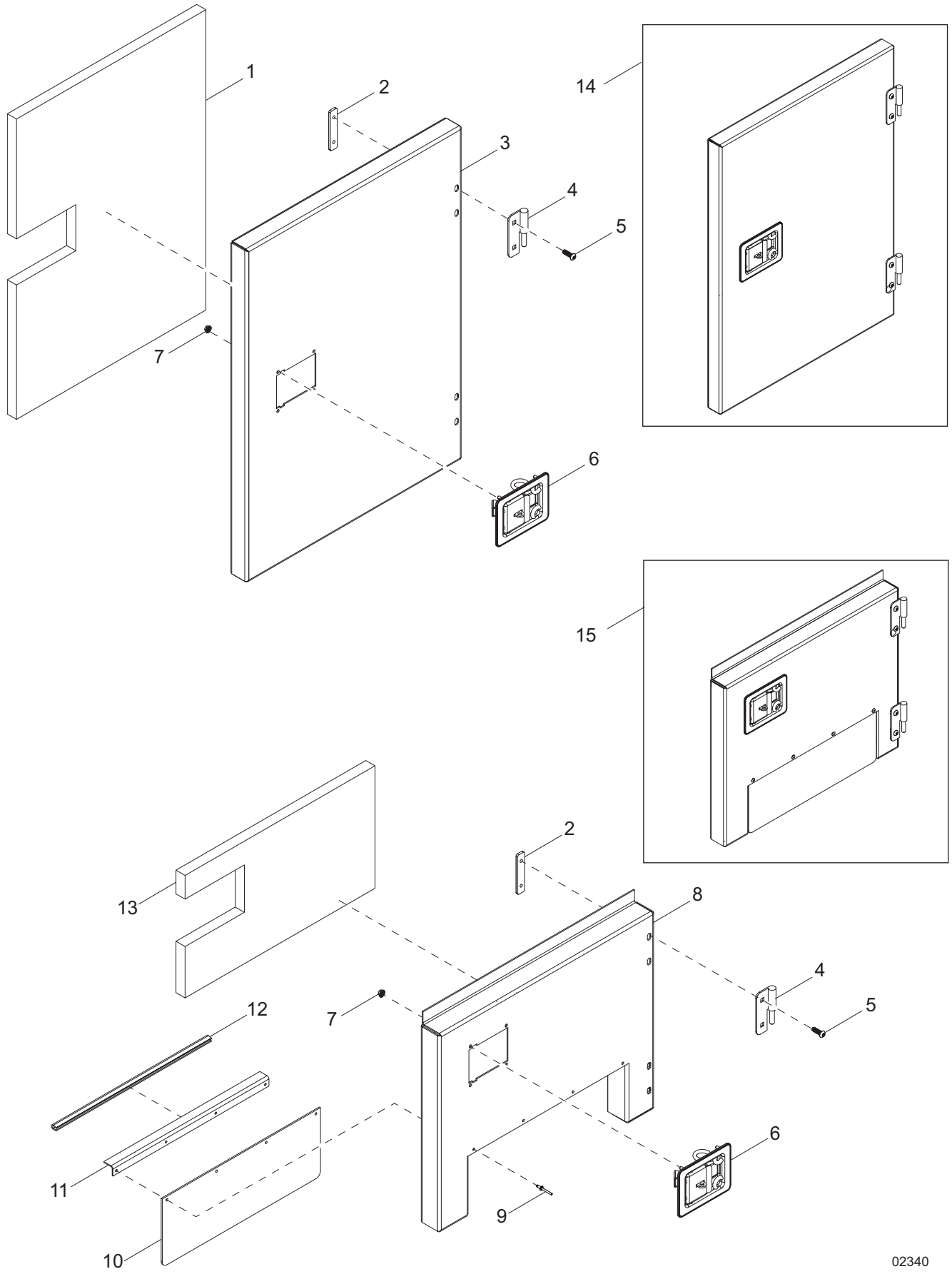

# DOOR ASSEMBLY - CONTROLS - TOP AND BOTTOM

| Item | Part No. | Qty | Description | Notes |
|---|---|---|---|---|
| 1 | 10000017399 | 1 | Foam, controls door | |
| 2 | 10000011935 | 4 | Plate, hinge back - threaded | |
| 3 | 54024W | 1 | Door, controls - top | |
| 4 | 18461B | 4 | Hinge, left - male | |
| 5 | 63346 | 8 | Screw, .312-18 x 1.00 Scytrx - SS | |
| 6 | 54777 | 2 | Latch, paddle slam - black | |
| 7 | 60036 | 8 | Nut, M6-1.00 serrated flange, G8.8 | |
| 8 | 54026W | 1 | Door, controls - bottom | |
| 9 | 60268 | 4 | Rivet, .188 diameter x .126 to .250 grip | |
| 10 | 54027 | 1 | Flap | |
| 11 | 54028W | 1 | Bracket, door flap | |
| 12 | 56326 | 1 | Guard, edge | |
| 13 | 10000017493 | 1 | Foam, lower control door | |
| 14 | 10000017429 | 1 | Assembly, control door - top | Items 1-7 |
| 15 | 10000017467 | 1 | Assembly, control door - bottom | Items 2, 4-13 |

# DOOR ASSEMBLY - REAR LEFT

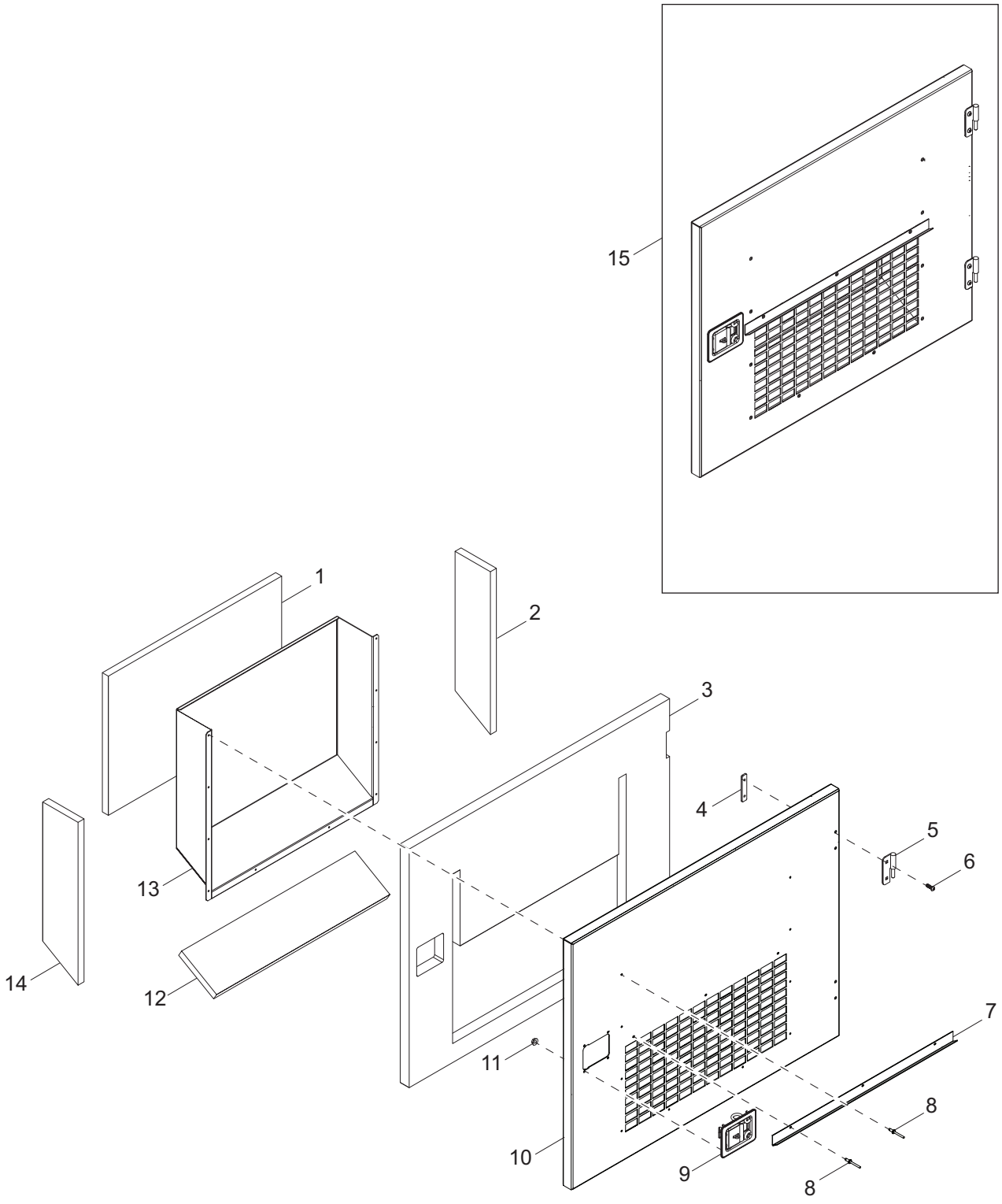


02401

| Item | Part No. | Qty | Description | Notes |
|---|---|---|---|---|
| 1 | 10000023601 | 1 | Foam, vent back | |
| 2 | 10000023586 | 1 | Foam, vent side | |
| 3 | 10000023591 | 1 | Foam, rear door - left | |
| 4 | 10000011935 | 2 | Plate, hinge back - threaded | |
| 5 | 18461B | 2 | Hinge, left - male | |
| 6 | 63346 | 4 | Screw, .312-18 x 1.00 Scytrx - SS | |
| 7 | 10000023558 | 1 | Rain gutter, large door | |
| 8 | 60268 | 13 | Rivet, .188 x .126 to .250 grip - SS | |
| 9 | 54777 | 1 | Latch, paddle slam - black | |
| 10 | 10000018526 | 1 | Panel, rear door - left | |
| 11 | 60036 | 4 | Nut, M6-1.00 serrated flange, G8.8 | |
| 12 | 10000023610 | 1 | Foam, vent bottom | |
| 13 | 10000018538 | 1 | Vent, rear - left | |
| 14 | 10000023567 | 1 | Foam, vent side | |
| 15 | 10000023561 | 1 | Assembly, rear door - left | |

# DOOR ASSEMBLY - REAR

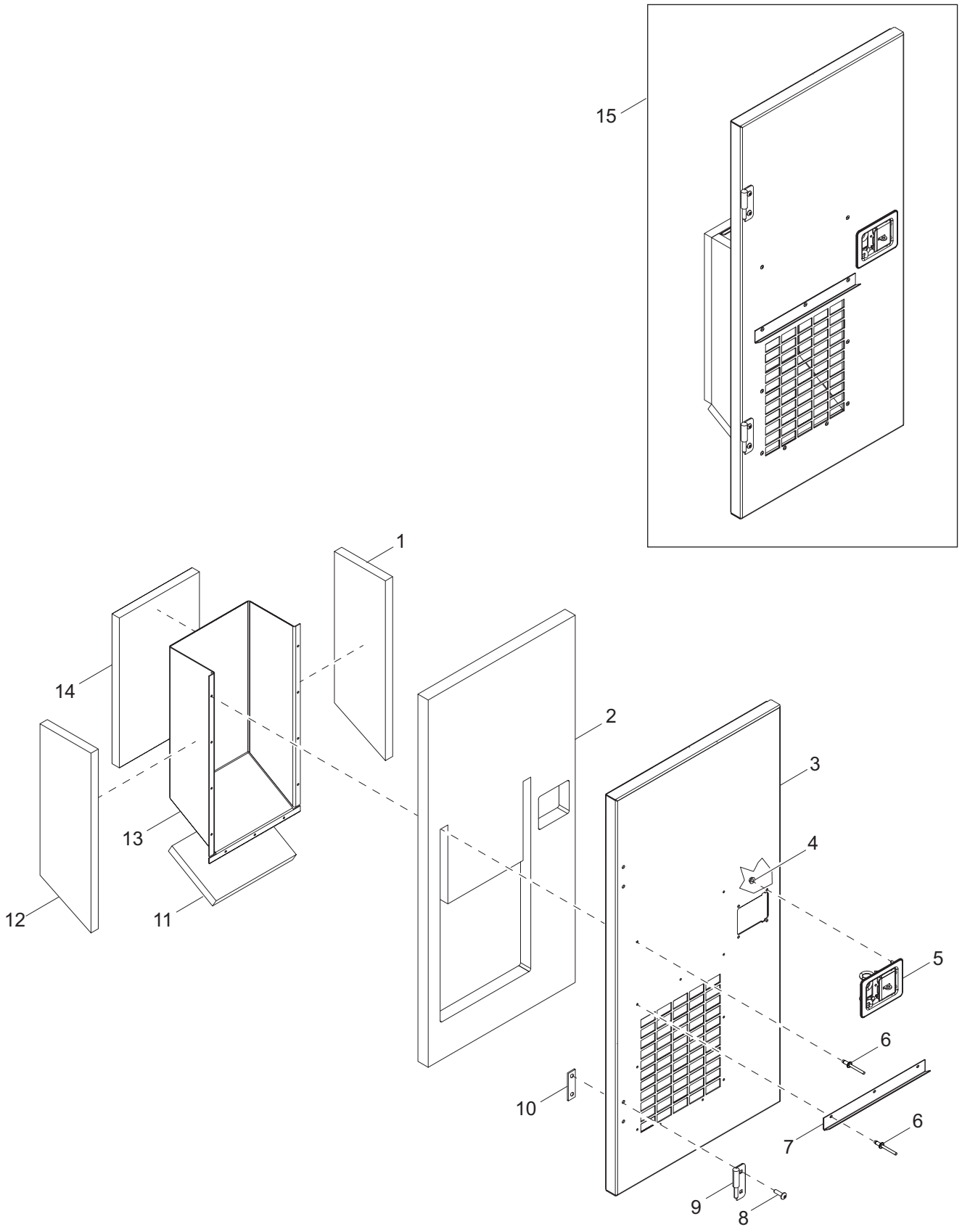

| Item | Part No. | Qty | Description | Notes |
|---|---|---|---|---|
| 1 | 10000023586 | 1 | Foam, vent side | |
| 2 | 10000024587 | 1 | Foam, rear access door | |
| 3 | 10000018553 | 1 | Panel, rear access door | |
| 4 | 60036 | 4 | Nut, M6-1.00 serrated flange, G8.8 | |
| 5 | 54777 | 1 | Latch, paddle slam - black | |
| 6 | 60268 | 11 | Rivet, .188 x .163 to .250 grip - SS | |
| 7 | 10000023616 | 1 | Rain gutter, small door | |
| 8 | 63346 | 4 | Screw, .312-18 x 1.00 Scytrx - SS | |
| 9 | 18459B | 2 | Hinge, right - male | |
| 10 | 10000011935 | 2 | Plate, hinge back - threaded | |
| 11 | 10000023588 | 1 | Foam, vent - bottom | |
| 12 | 10000023567 | 1 | Foam, vent - left | |
| 13 | 10000018555 | 1 | Panel, vent - rear door | |
| 14 | 10000023611 | 1 | Foam, vent - back | |
| 15 | 10000023516 | 1 | Assembly, rear access door | |

# DOOR ASSEMBLY - FRONT LEFT

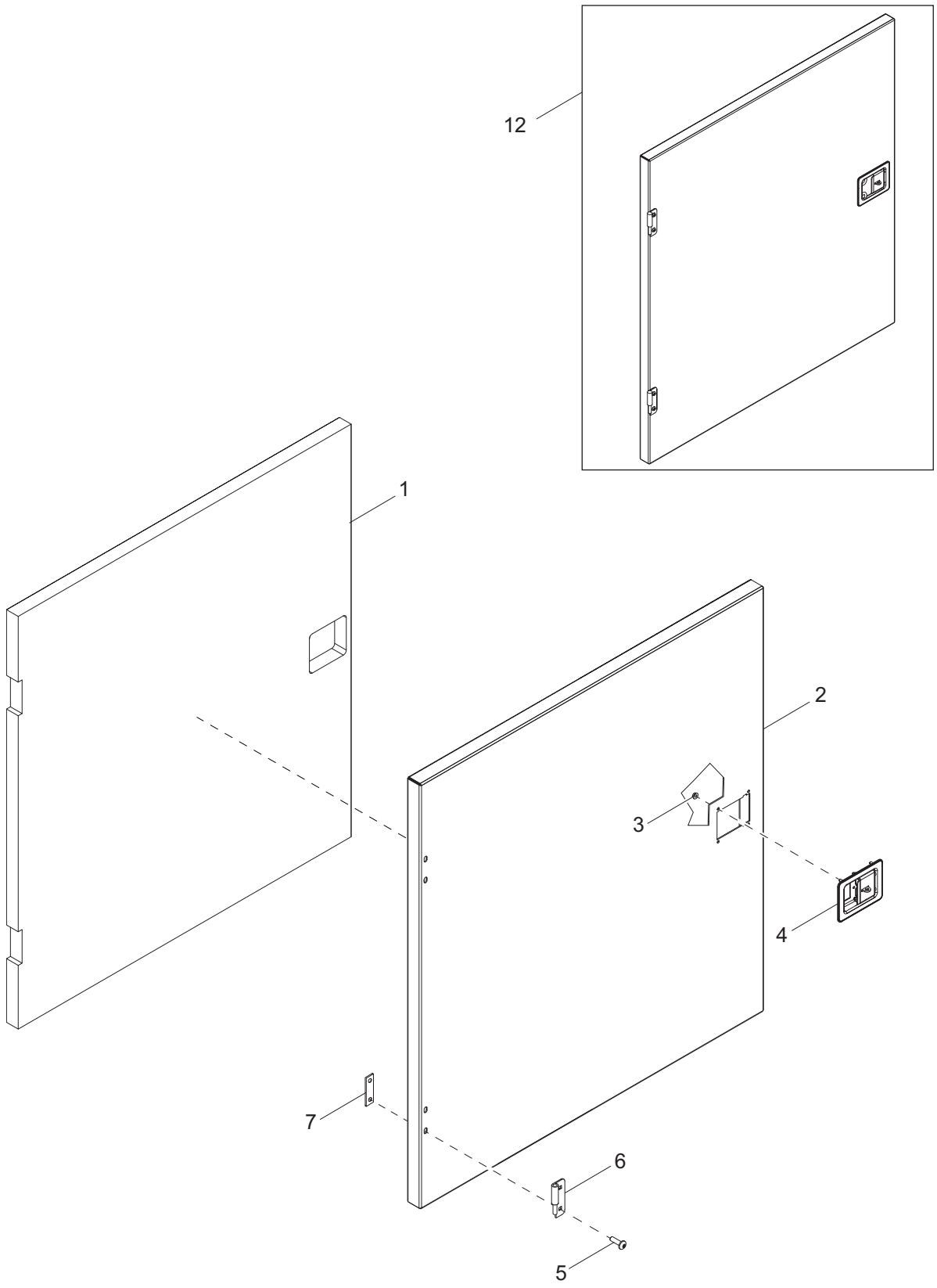

| Item | Part No. | Qty | Description | Notes |
|---|---|---|---|---|
| 1 | 10000023589 | 1 | Foam, front door - left | |
| 2 | 10000018525 | 1 | Panel, front door - left | |
| 3 | 60036 | 4 | Nut, M6-1.00 serrated flange, G8.8 | |
| 4 | 54777 | 1 | Latch, paddle slam - black | |
| 5 | 63346 | 4 | Screw, .312-18 x 1.0 Scytrx - SS | |
| 6 | 18459B | 2 | Hinge, right (male) | |
| 7 | 36672ZC | 2 | Plate, hinge back - threaded | |
| 8 | 10000023507 | 1 | Assembly, front door - left | |

# DOOR ASSEMBLY - FRONT RIGHT

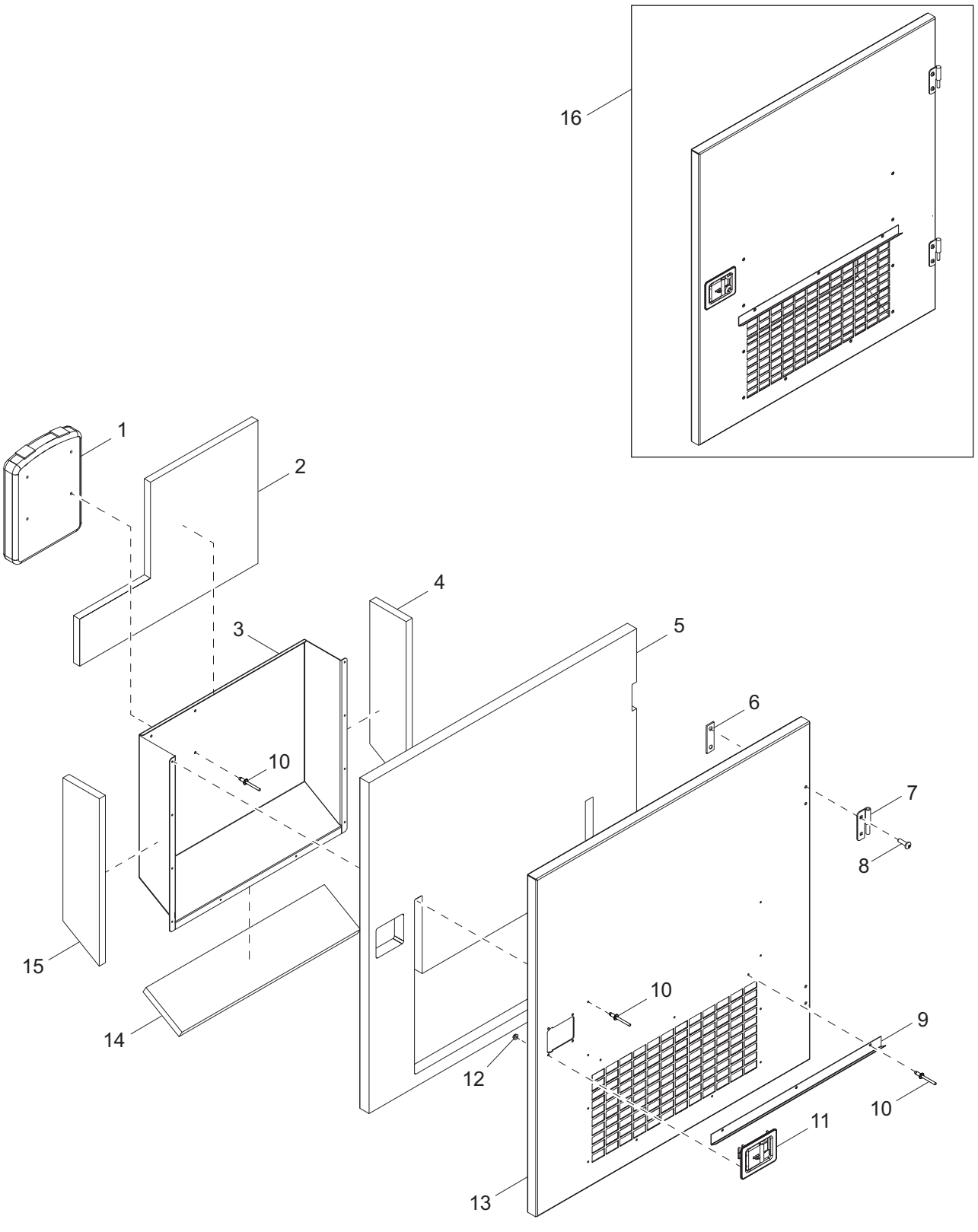

| Item | Part No. | Qty | Description | Notes |
|---|---|---|---|---|
| 1 | 24540 | 1 | Holder, manual - plastic | |
| 2 | 10000023352 | 1 | Foam, vent back | |
| 3 | 10000018538 | 1 | Panel, rear vent - right | |
| 4 | 10000023586 | 1 | Foam, vent side | |
| 5 | 10000023568 | 1 | Foam, side door - right | |
| 6 | 36672ZC | 2 | Plate, hinge back - threaded | |
| 7 | 18461B | 2 | Hinge, left - male | |
| 8 | 63346 | 4 | Screw, .312-18 x 1.0 Scytrx - SS | |
| 9 | 10000023558 | 1 | Rain gutter, large door | |
| 10 | 60268 | 17 | Rivet, .188 diameter x .126 to .250 grip - SS | |
| 11 | 54777 | 1 | Latch, paddle slam - black | |
| 12 | 60036 | 4 | Nut, M6-1.00 serrated flange, G8.8 | |
| 13 | 10000018548 | 1 | Panel, front - right | |
| 14 | 10000023610 | 1 | Foam, vent bottom | |
| 15 | 10000023567 | | Foam, vent side | |
| 16 | 10000023613 | 1 | Assembly, front door - right | |

# FUEL PANEL ASSEMBLY

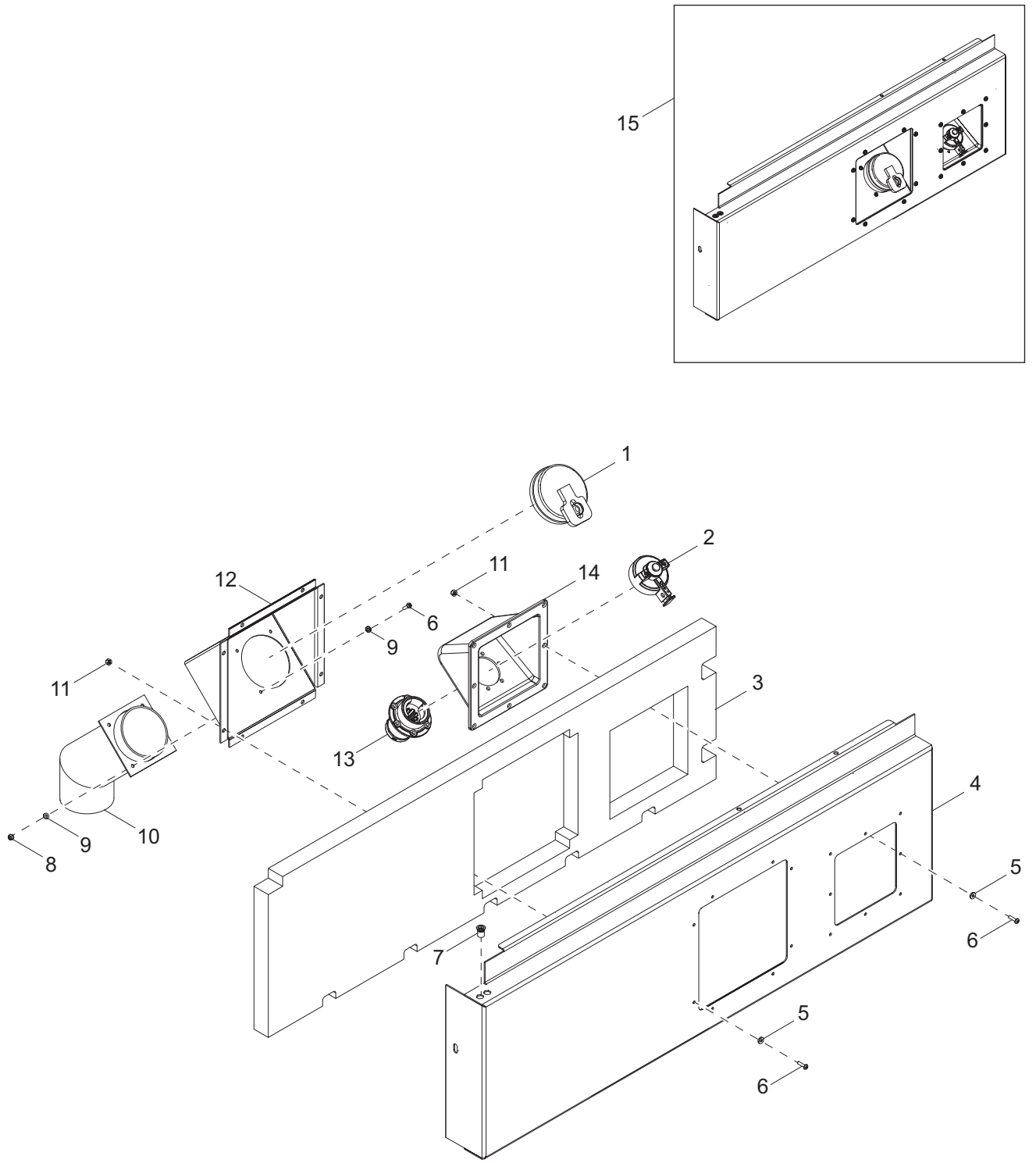

| Item | Part No. | Qty | Description | Notes |
|---|---|---|---|---|
| 1 | 55104 | 1 | Cap, fuel fill 3.50 - green | |
| 2 | 54005 | 1 | Cap, DEF fill | |
| 3 | 10000023612 | 1 | Foam, fill panel | |
| 4 | 10000018554 | 1 | Panel, rear - left | |
| 5 | 61222 | 16 | Washer, #10 sealing | |
| 6 | 61180 | 20 | Screw, 10-32 x .750 pan Phillips | |
| 7 | 63097 | 8 | Insert, threaded .313-18 hex .027-.150 grip | |
| 8 | 60061 | 4 | Nut, 10-32 nylock | |
| 9 | 60067 | 8 | Washer, #10 flat - SS | |
| 10 | 23710B | 1 | Weldment, 3.50 fuel fill neck | |
| 11 | 61045 | 16 | Nut, 10-32 serrated flange | |
| 12 | 23697B | 1 | Panel, fuel inlet | |
| 13 | 54006 | 1 | Adapter, DEF fill | |
| 14 | 54007 | 1 | Assembly, fluid guard | |
| 15 | 10000023506 | 1 | Assembly, rear panel - left | |

## RECEPTACLE / E-STOP PANEL ASSEMBLY

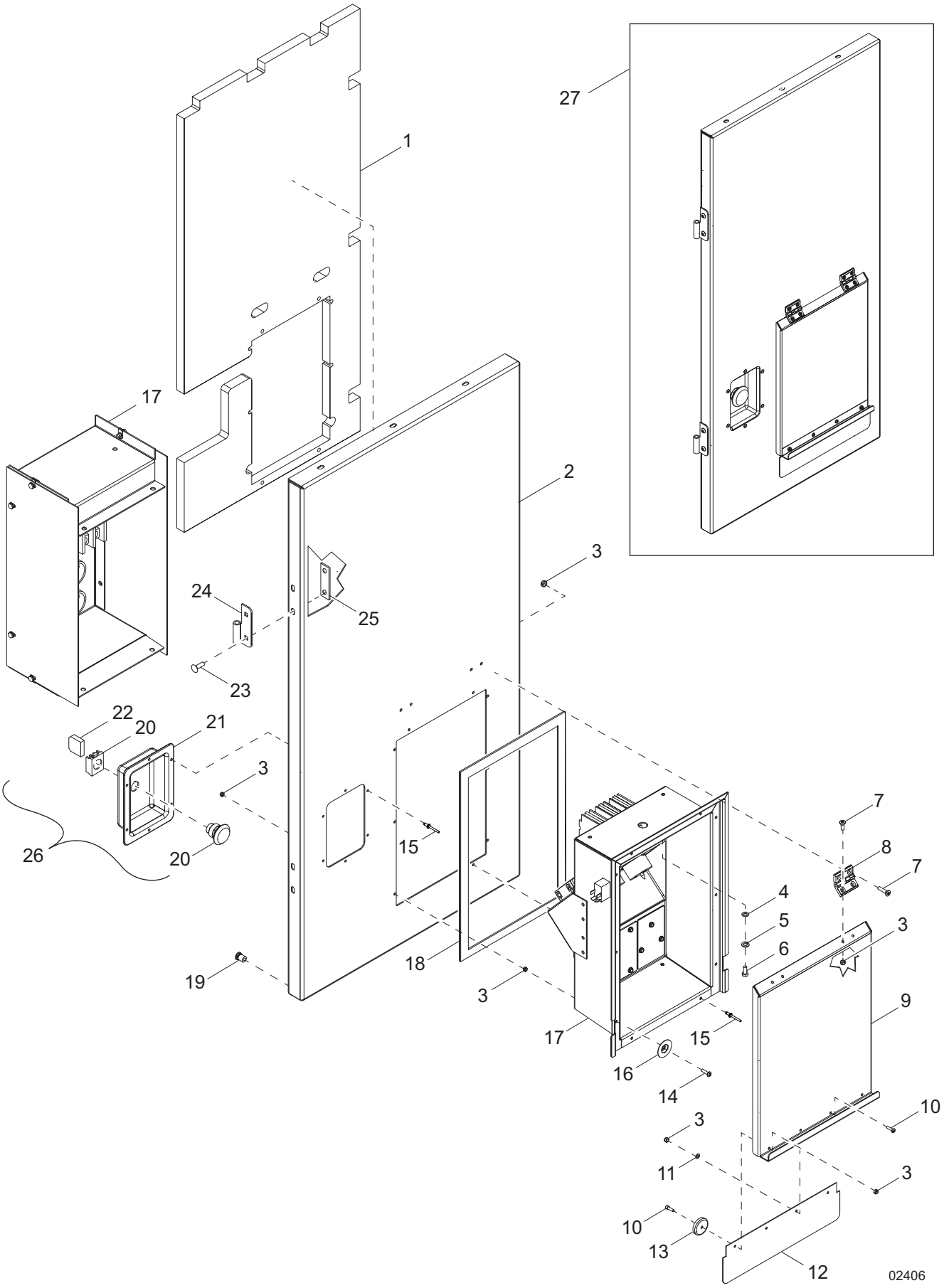

| Item | Part No. | Qty | Description | Notes |
|---|---|---|---|---|
| 1 | 10000023620 | 1 | Foam, receptacle/E-stop panel | |
| 2 | 10000019360 | 1 | Panel, receptacle/E-stop | |
| 3 | 60061 | 16 | Nut, 10-32 nylock | |
| 4 | 60243 | 4 | Washer, .250 flat .735/.060 | |
| 5 | 60286 | 4 | Washer, .250 split lock | |
| 6 | 60281 | 4 | Screw, .250-20 x .750 standard hex, G5 | |
| 7 | 10000019958 | 8 | Screw, 10-32 x .625 flat head Phillips - SS | |
| 8 | 35394 | 2 | Hinge, door - small | |
| 9 | 51719W | 1 | Door, receptacle box | |
| 10 | 60277 | 4 | Screw, 10-32 x .500 pan Phillips - SS | |
| 11 | 60269 | 2 | Washer, #8 flat .433/.036 | |
| 12 | 51721 | 1 | Flap, receptacle door - rubber | |
| 13 | 51725 | 2 | Cup, magnet 1-15/64 diameter -14# pull | |
| 14 | 61180 | 2 | Screw, 10-32 x .750 pan Phillips - SS | |
| 15 | 60260 | 14 | Rivet, .188 diameter x .375 to .500 grip - SS | |
| 16 | 62140 | 2 | Washer, cup #10 1.50/.03 | |
| 17 | 54990 | 1 | Assembly, receptacle/breaker box | |
| 18 | 55059 | 1 | Gasket, receptacle door | |
| 19 | 63231 | 4 | Insert, threaded .250-20 hex .027-.165 grip | |
| 20 | 65470 | 1 | Switch, E-stop operator | |
| 21 | 30645 | 1 | Panel, emergency stop | |
| 22 | 65580 | 1 | Block, E-stop contactor | |
| 23 | 63346 | 4 | Screw, .312-18 x 1.00 Scytrx sq - SS | |
| 24 | 18460B | 2 | Hinge, left (male) | |
| 25 | 10000011935 | 2 | Plate, hinge back - threaded | |
| 26 | 22550SRV | 1 | Assembly, e-stop | Items 20-22 |
| 27 | 10000018322 | 1 | Assembly, receptacle / e-stop panel | Excludes 54990 |

# RECEPTACLE PANEL ASSEMBLY

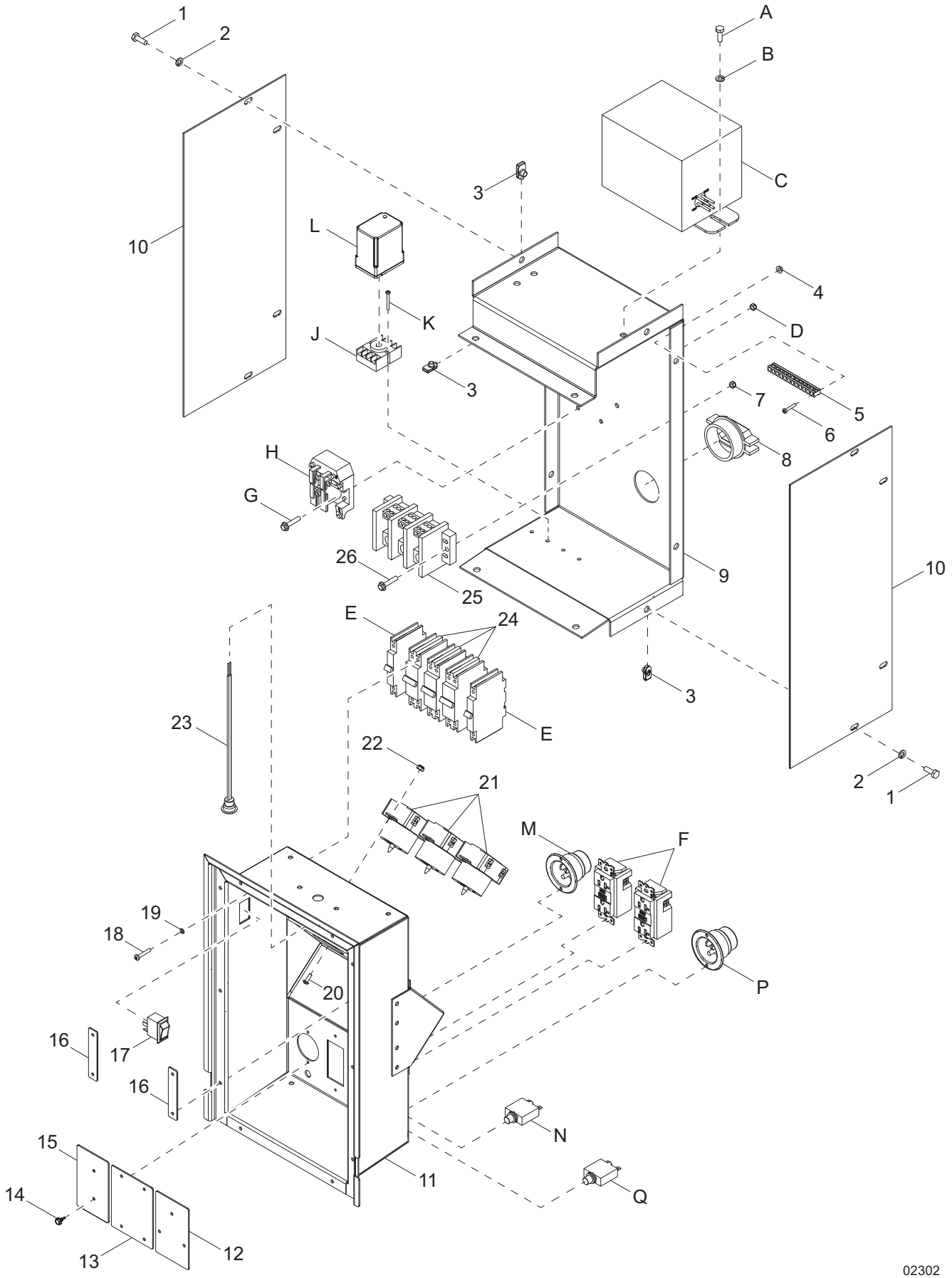

| Item | Part No. | Qty | Description | Notes |
|---|---|---|---|---|
| 1 | 60281 | 12 | Screw, .250-20 x .750 hex, G5 | |
| 2 | 60286 | 12 | Washer, .250 split lock | |
| 3 | 61143 | 12 | Nut, .250-20 u-clip, short type | |
| 4 | 61045 | 2 | Nut, 10-32 serrated flange | |
| 5 | 14204 | 1 | Kit, ground bar | |
| 6 | 60397 | 2 | Screw, 10-32 x 1.00 pan Phillips, G2 | |
| 7 | 60036 | 2 | Nut, M6-1.00 serrated flange hex, G8.8 | |
| 8 | 65788 | 1 | Strain relief, 2.0 Romex w/nut | |
| 9 | 54991B | 1 | Box, back receptacle | |
| 10 | 51715B | 2 | Panel, back receptacle | |
| 11 | 54989B | 1 | Box, receptacle/breaker/outlet LED | |
| 12 | 10000009636 | 1 | Cover, block heater receptacle | |
| 13 | 10000009672 | 1 | Cover, buck transformer receptacle | |
| 14 | 60364 | 9 | Screw, 10-16 x .500 hex, G2 - self drilling | |
| 15 | 10000009645 | 1 | Cover, battery charger receptacle | |
| 16 | 10000009680 | 2 | Cover, 20A breaker | |
| 17 | 66995 | 1 | Switch, rocker - DPST, on-off | |
| 18 | 60046 | 16 | Screw, 6-32 x .750 pan Phillips, G2 | |
| 19 | 60058 | 16 | Washer, #6 split lock | |
| 20 | 62054 | 6 | Screw, 8-32 x .500 pan Phillips, SS | |
| 21 | 18089 | 3 | Receptacle, 240V/50A twist lock | |
| 22 | 60270 | 6 | Nut, 8-32 nylock, G6 | |
| 23 | 39651 | 1 | Light, controls | |
| 24 | 18092 | 3 | Breaker, 50A, 240V - 2 pole | |
| 25 | 65356 | 1 | Block, terminal - 3 pole | |
| 26 | 60024 | 2 | Screw, M6-1.00 x 25 serrated flange hex | |
| *Buck Transformer w/Receptacles (if equipped):* | | | | |
| A | 60281 | 2 | Screw, .250-20 x .750 hex, G5 | |
| B | 60286 | 2 | Washer, .250 split lock | |
| C | 21487 | 1 | Transformer, 1.13:1, 1-phase, 500VA | |
| D | 60036 | 2 | Nut, M6-1.00 serrated flange hex, G8.8 | |
| E | 18091 | 2 | Breaker, 20A, 240V - 1 pole | |
| F | 14130 | 2 | Receptacle, 120V/20A GFI | |
| G | 60024 | 2 | Screw, M6-1.00 x 25 serrated flange hex | |
| H | 65461 | 1 | Relay, 30A DPDT - 120VAC | |
| J | 65644 | 1 | Base, relay - 8 position | |
| K | 60288 | 4 | Screw, 6-32 x 1.250 pan Phillips, G2 | |
| L | 66340 | 1 | Relay, voltage sensing (132 in - 126 out) | |
| *Battery Charger (if equipped):* | | | | |
| M | 65285 | 1 | Receptacle, 125V/15A inlet | |
| N | 15568 | 1 | Breaker, 15A 120V - 1 pole, push button | |
| *Block Heater (if equipped):* | | | | |
| P | 68635 | 1 | Receptacle, 125V/30A inlet | |
| Q | 14432 | 1 | Breaker, 30A 120V - 1 pole, push button | |

# CONTROL PANEL DOOR ASSEMBLY

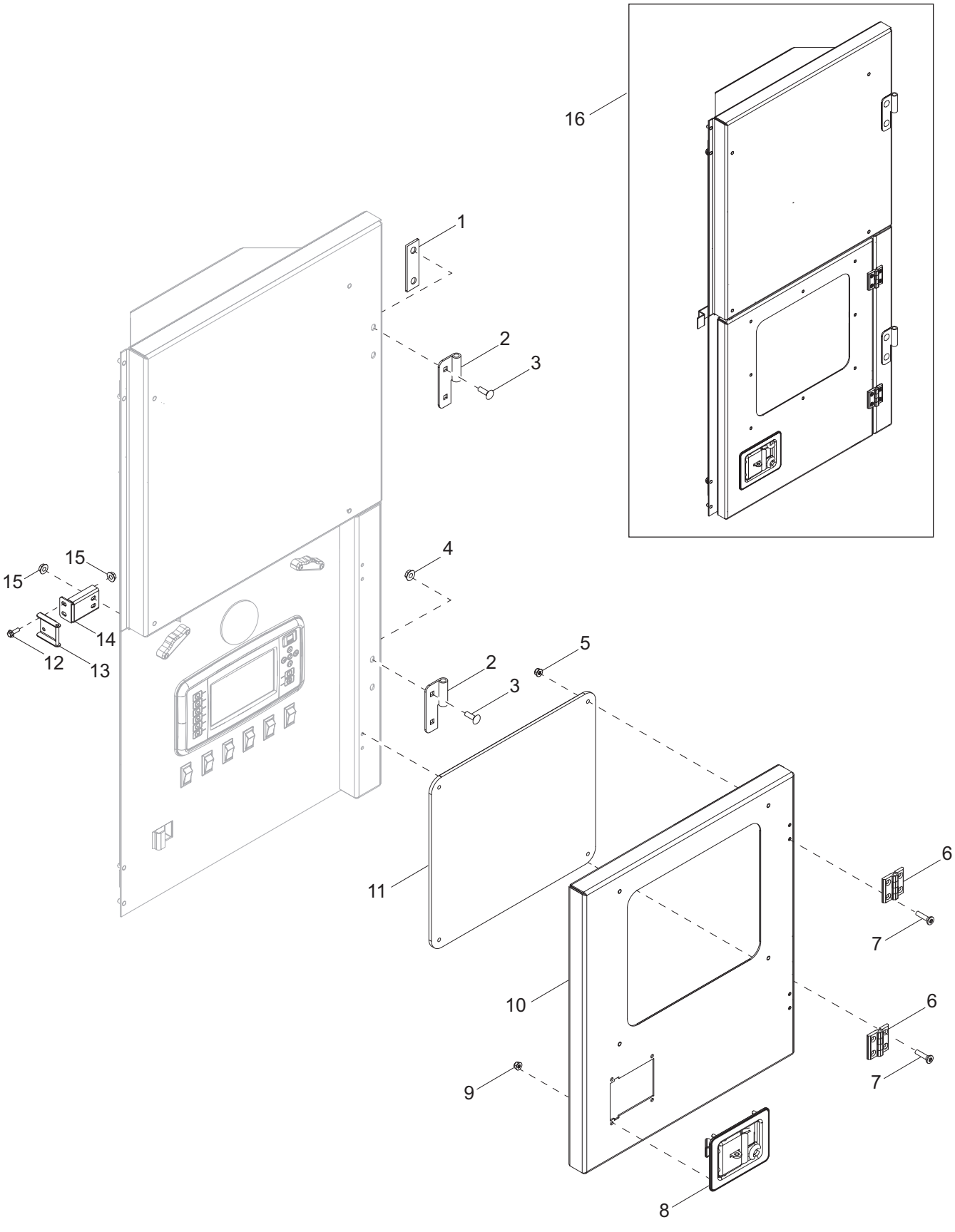

| Item | Part No. | Qty | Description | Notes |
|---|---|---|---|---|
| 1 | 10000011935 | 1 | Plate, hinge back - threaded | |
| 2 | 18460B | 2 | Hinge, left (female) | |
| 3 | 63346 | 4 | Screw, .312-18 x 1.00 Scytrx - SS | |
| 4 | 60095 | 4 | Nut, .312-18 serrated flange hex | |
| 5 | 63075 | 8 | Nut, .250-20 flange nylock, G5 | |
| 6 | 35394 | 2 | Hinge, door - small | |
| 7 | 54135 | 8 | Screw, 10-24 x .500 flat head Phillips - SS | |
| 8 | 54777 | 1 | Latch, paddle slam - black | |
| 9 | 60036 | 4 | Nut, M6-100 serrated flange hex, G8.8 | |
| 10 | 55028W | 1 | Door, controls - small | |
| 11 | 54387 | 1 | Window, rear display | |
| 12 | 60175 | 2 | Screw, .250-20 x .500 serrated flange hex, G5 | |
| 13 | 10000013494 | 1 | Weldment, striker | |
| 14 | 10000014172 | 1 | Mount, door striker | |
| 15 | 60161 | 2 | Nut, .250-20 serrated flange, G5 | |
| 16 | 10000017497 | 1 | Assembly, control panel door | |

# CONTROL PANEL ASSEMBLY (2 OF 2)

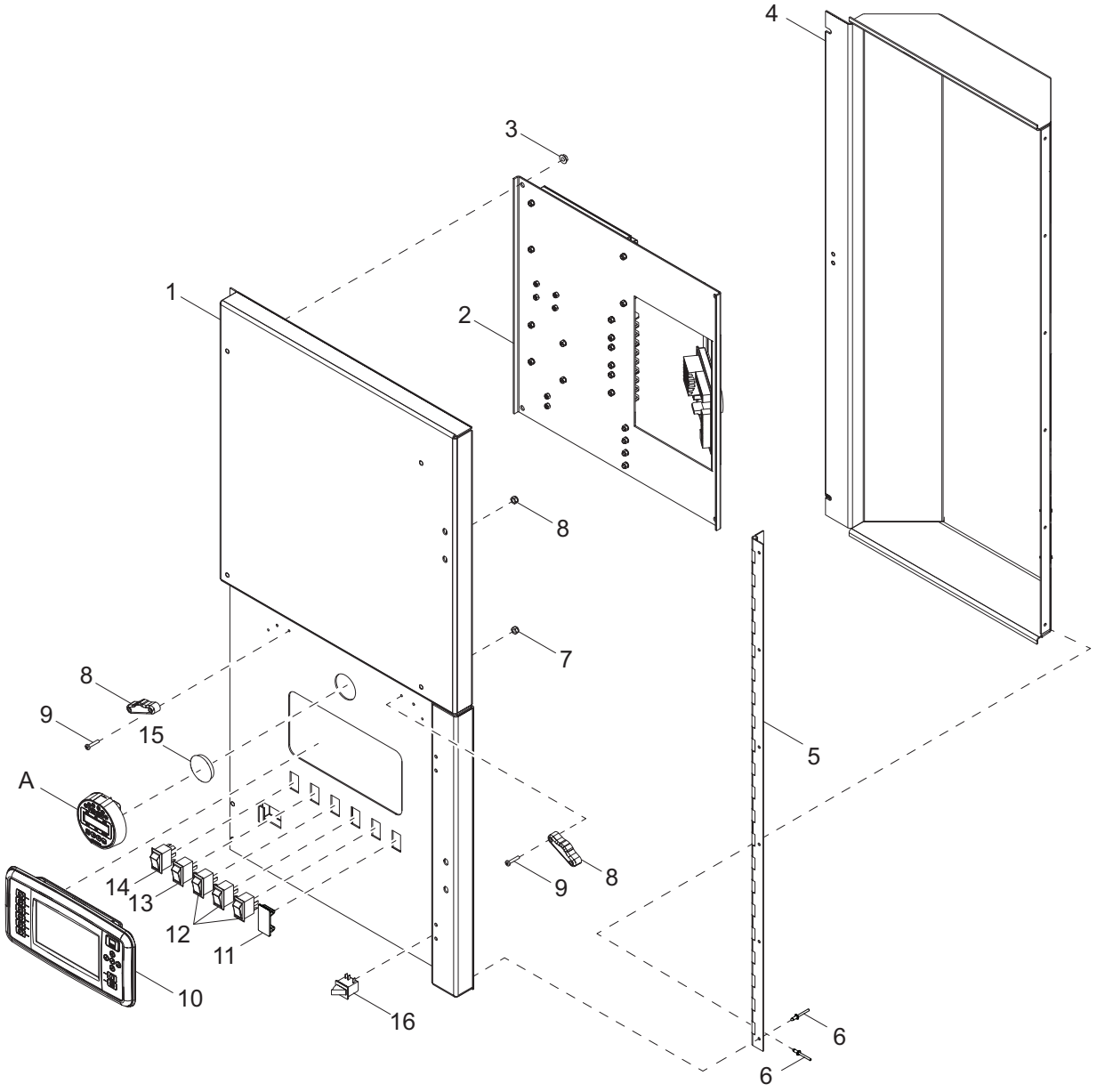

| Item | Part No. | Qty | Description | Notes |
|---|---|---|---|---|
| 1 | 55053W | 1 | Door, main controls | |
| 2 | 55031 | 1 | Assembly, control panel - sub | |
| 3 | 60095 | 6 | Nut, .312-18 serrated flange hex | |
| 4 | 55026W | 1 | Door, rear control door | |
| 5 | 11095 | 1 | Hinge, continuous - 43.00 | |
| 6 | 60268 | 12 | Rivet, .188 diameter x .126 to .250 grip - SS | |
| 7 | 60270 | 4 | Nut, 8-32 nylock, G6 | |
| 8 | 10000017915 | 2 | Assembly, LED lighting | |
| 9 | 60695 | 4 | Screw, 8-32 x 1.00 pan Phillips - SS | |
| 10 | 33157 | 1 | Display, 7” DSE | |
| 11 | 34439 | 1 | Plug, panel switch | |
| 12 | 66995 | 4 | Switch, rocker - DPST, on-off | |
| 13 | 66996 | 1 | Switch, rocker - DPDT, on-off/(on) | |
| 14 | 68530 | 1 | Switch, rocker - DPST, on-on | |
| 15 | 32956 | 1 | Plug, hole 2.00 press in - nylon | |
| 16 | 65830 | 1 | Switch, trigger safety | |
| *Paralleling (if equipped):* | | | | |
| A | 55103 | 1 | Display and control, DEF | w/paralleling only |

# CONTROL PANEL ASSEMBLY (1 OF 2)

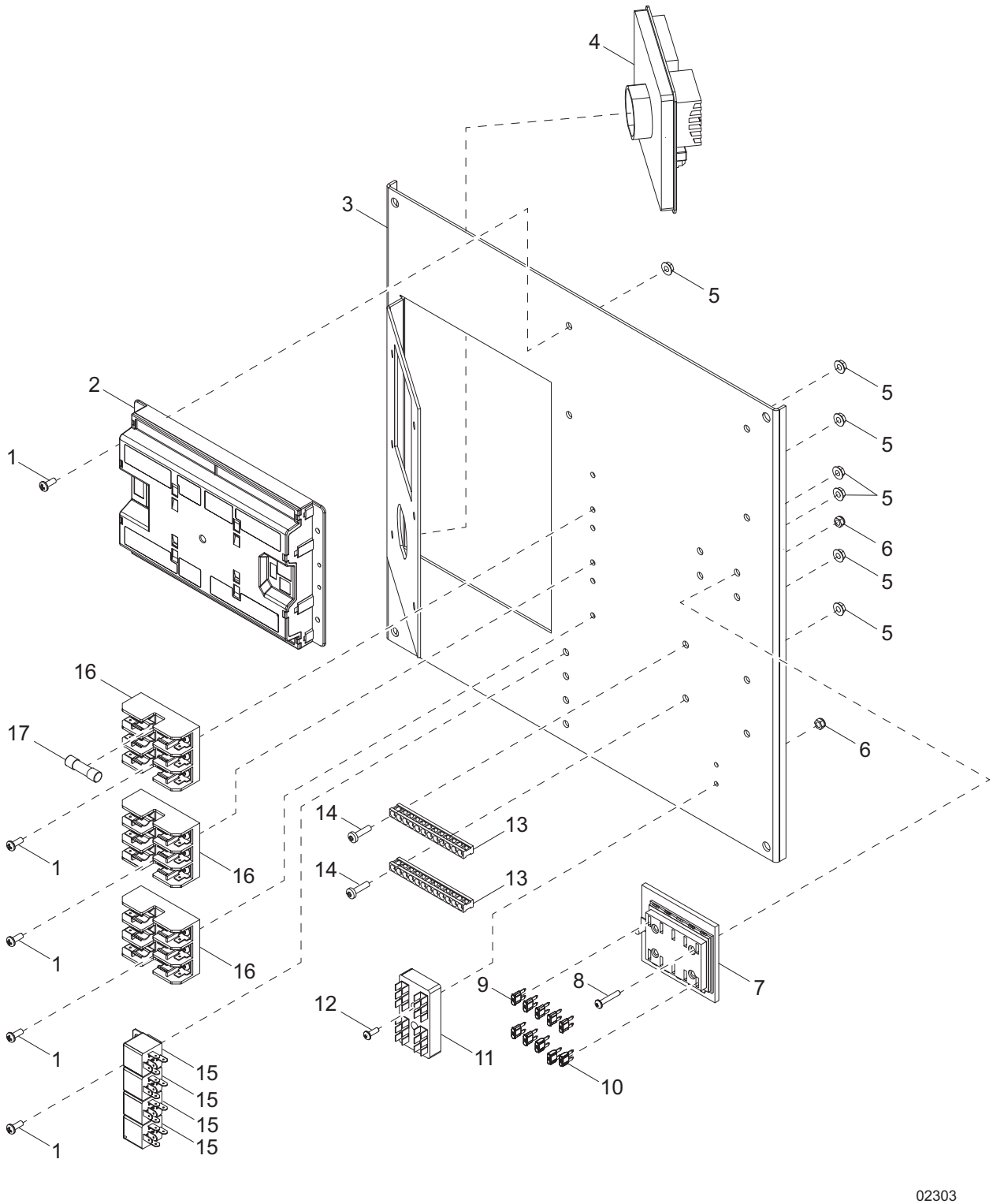

| Item | Part No. | Qty | Description | Notes |
|---|---|---|---|---|
| 1 | 60277 | 14 | Screw, 10-32 x .500 pan Phillips, G2 | |
| 2 | Contact Us* | 1 | Controller, Deep Sea 7740 | See Note below |
| 3 | 10000011770 | 1 | Controls, sub plate | |
| 4 | 68015 | 1 | Regulator, voltage | |
| 5 | 61045 | 18 | Nut, 10-32 serrated flange | |
| 6 | 62068 | 6 | Nut, 8-32 nylock - SS | |
| 7 | 10000007847 | 1 | Fuse block, 10 position | |
| 8 | 54150 | 4 | Screw, 8-32 x 1.00 pan Phillips | |
| 9 | 35560 | 7 | Fuse, 20A | |
| 10 | 68204 | 3 | Fuse, 15A | |
| 11 | 66992 | 1 | Terminal block, 4 x 6 push-on | |
| 12 | 62054 | 2 | Screw, 8-32 x .500 pan Phillips - SS | |
| 13 | 14204 | 2 | Kit, ground bar | |
| 14 | 60062 | 4 | Screw, 10-32 x .750 pan Phillips, G2 | |
| 15 | 65049 | 4 | Relay, 12V 30/40A N.O. w/diode | |
| 16 | 0D2572 | 3 | Fuse block, 30A 600V - 3 position w/sq | |
| 17 | 073590A | 9 | Fuse, 5A | |

***Note:*** ** To order replacement controller, contact Generac Mobile Products with unit serial number*

# BREAKER/LUG BOX ASSEMBLY

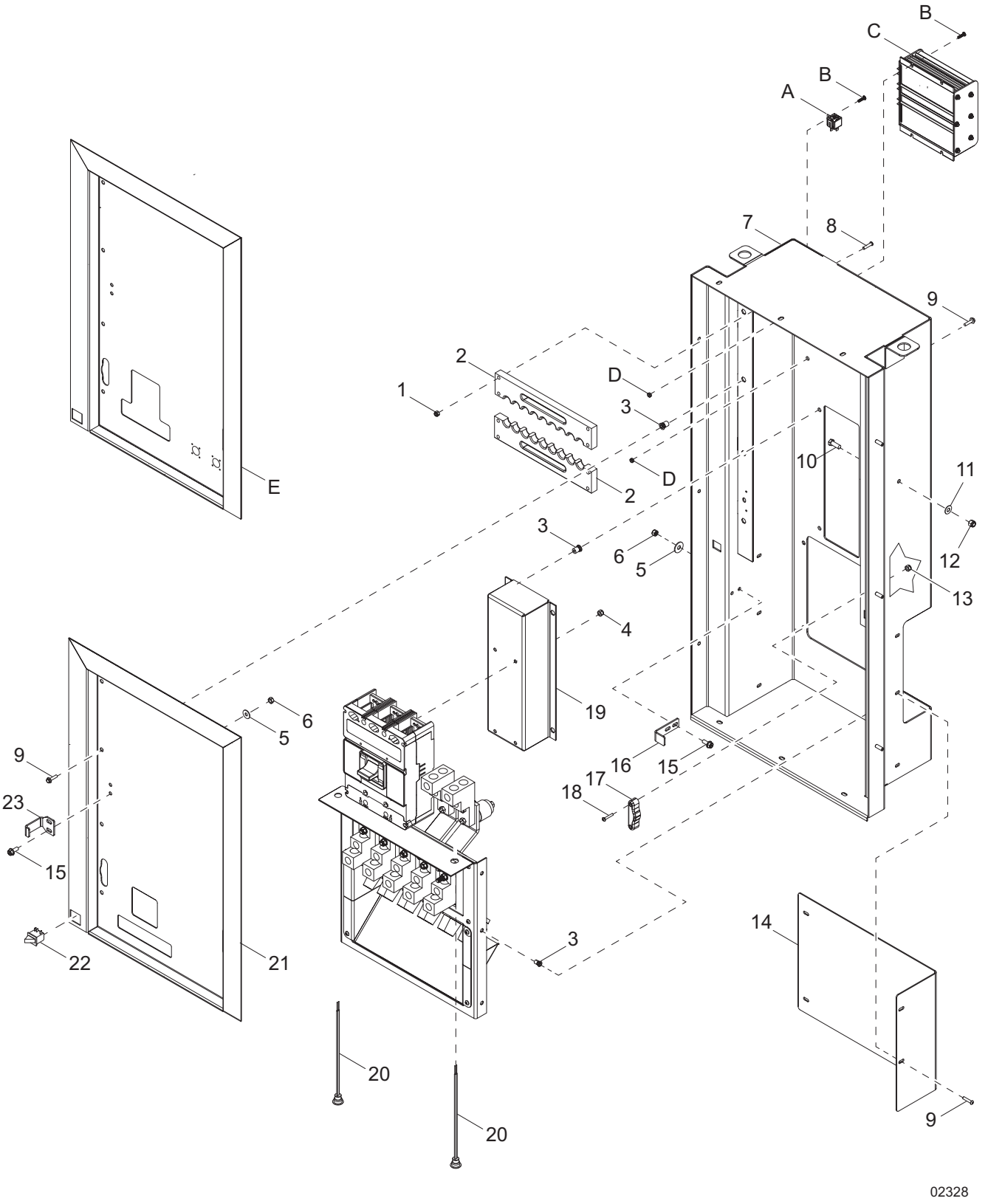

| Item | Part No. | Qty | Description | Notes |
|---|---|---|---|---|
| 1 | 60144 | 8 | Nut, .250-20 nylock, G5 | |
| 2 | 56346 | 2 | Plate, cable support | |
| 3 | 63097 | 14 | Insert, threaded .312-18 hex .027-.150 grip | |
| 4 | 60303 | 4 | Nut, .312-18 nylock, G2 | |
| 5 | 60340 | 4 | Washer, .312 flat .875/.040 | |
| 6 | 60784 | 4 | Nut, .312-18 nylock - SS | |
| 7 | 54030W | 1 | Weldment, AC power box | |
| 8 | 68070 | 8 | Screw, .250-20 x 1.0 button hex - SS | |
| 9 | 61091 | 14 | Screw, .312-18 x 1.0 serrated flange hex, G5 | |
| 10 | 60690 | 1 | Screw, .375-16 x 1.0 standard hex - SS | |
| 11 | 60698 | 1 | Washer, .375 flat .875/.040 - SS | |
| 12 | 60792 | 1 | Nut, .375-16 nylock - SS | |
| 13 | 60270 | 4 | Nut, 8-32 nylock, G6 | |
| 14 | 56363W | 1 | Plate, rear control box | |
| 15 | 60616 | 4 | Screw, .312-18 x .750 serrated flange hex, G5 | |
| 16 | 55021W | 1 | Striker, lug door | |
| 17 | 10000017915 | 2 | Assembly, LED light | |
| 18 | 60695 | 4 | Screw, 8-32 x 1.00 pan Phillips - SS | |
| 19 | 54976W | 1 | Mount, breaker | |
| 20 | 12632 | 1 | Switch, trigger safety, N.O. | |
| 21 | 39651 | 2 | Light, controls | |
| 22 | 51744W | 1 | Panel, AC distribution | |
| 23 | 55022W | 1 | Striker, breaker door | |
| *Paralleling Kit (if equipped):* | | | | |
| A | 67028 | 2 | Relay, 24V 30/40A N.O. w/diode | |
| B | 60850 | 6 | Screw, 10-24 x .750 pan Phillips, G2 | |
| C | 10000009022 | 1 | Converter, DC - DC 12V-24V | |
| D | 60457 | 6 | Nut, 10-24 nylock, G2 | |
| E | 54899W | 1 | Panel, AC distribution - paralleling | |

# BREAKER AND LUG ASSEMBLY

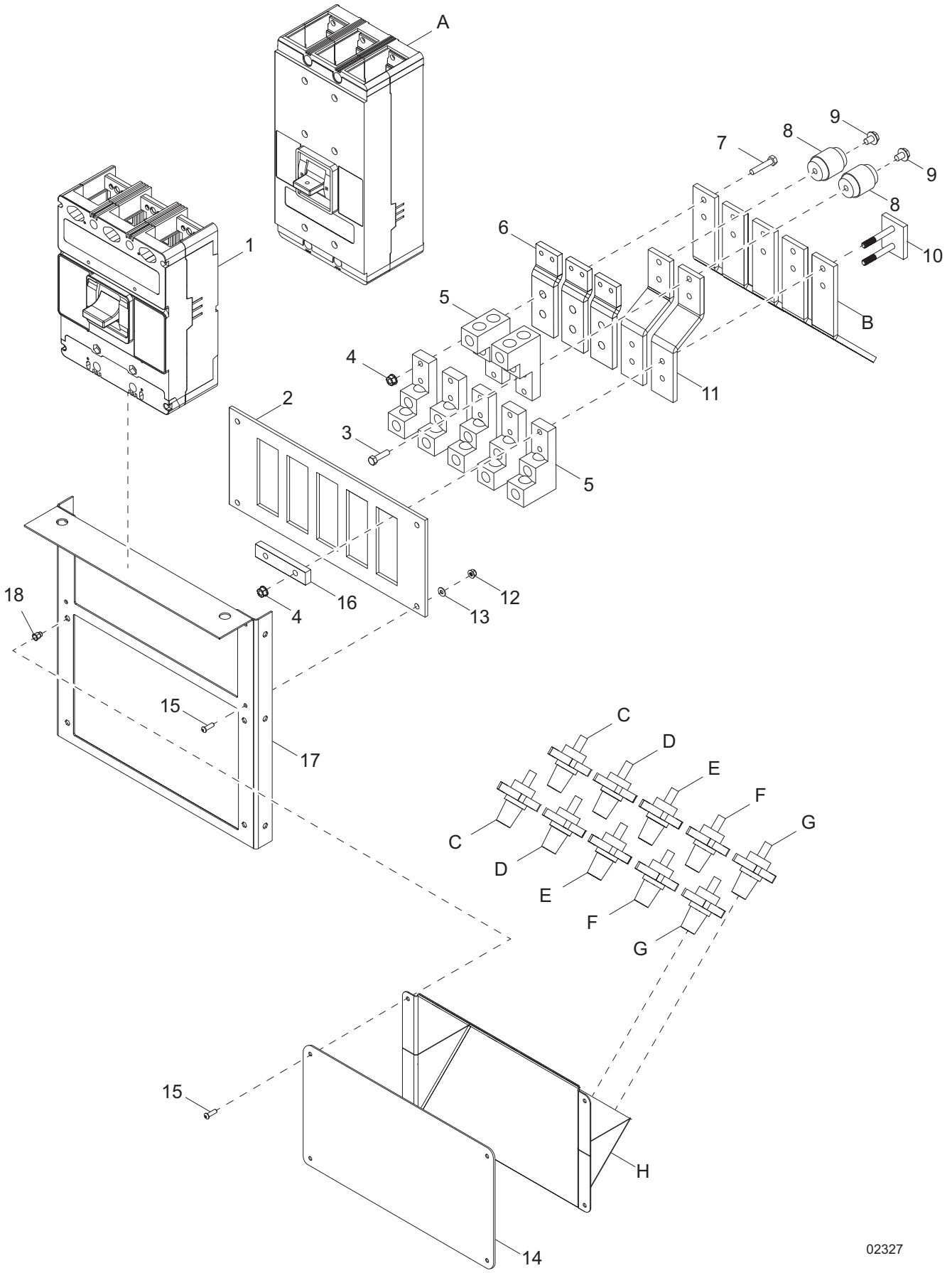

| Item | Part No. | Qty | Description | Notes |
|---|---|---|---|---|
| 1 | 10000007615 | 1 | Breaker, 600A, 3 pole, 9-24V | |
| 2 | 54959 | 1 | Panel, AC box | |
| 3 | 60139 | 2 | Screw, .375-16 x 1.50 standard hex, G5 | |
| 4 | 60145 | 20 | Nut, .375-16 serrated flange, G5 | |
| 5 | 65890 | 7 | Lug, terminal dual #6-35MCM - 2 hole | |
| 6 | 10000008297 | 3 | Bus bar, breaker to lug | |
| 7 | 60478 | 16 | Screw, .375-16 x 2.00 standard hex, G5 | |
| 8 | 69604 | 2 | Insulator, standoff -2700V | |
| 9 | 62049 | 2 | Screw, .375-16 x .500 serrated flange hex - SS | |
| 10 | 56362 | 2 | Assembly, bolt plate | |
| 11 | 54957 | 2 | Bus bar, ground - neutral | |
| 12 | 60144 | 4 | Nut, .250-20 nylock, G5 | |
| 13 | 60696 | 4 | Washer, .250 flat .625/.050 - SS | |
| 14 | 54955W | 1 | Plate, AC distribution - no cam | |
| 15 | 68070 | 8 | Screw, .250-20 x 2.00 button hex - SS | |
| 16 | 56361 | 1 | Bus bar | |
| 17 | 54946W | 1 | Bracket, cam lock - 2 row | |
| 18 | 63097 | 4 | Insert, threaded .312-18 hex .027-.150 grip | |
| *Paralleling Kit (if equipped):* | | | | |
| A | 55108 | 1 | Breaker, motorized 500A, 100% RTD | |
| *Cam Locks (if equipped):* | | | | |
| B | 54956 | 5 | Bus bar, cam locks | |
| C | 65551 | 2 | Connector, cam lock, female 400A - black | |
| D | 65552 | 2 | Connector, cam lock, female 400A - red | |
| E | 65553 | 2 | Connector, cam lock, female 400A - blue | |
| F | 65554 | 2 | Connector, cam lock, male 400A - white | |
| G | 65555 | 2 | Connector, cam lock, male 400A - green | |
| H | 54945W | 1 | Panel, cam lock - 2 row | |

# AIR FILTER ASSEMBLY

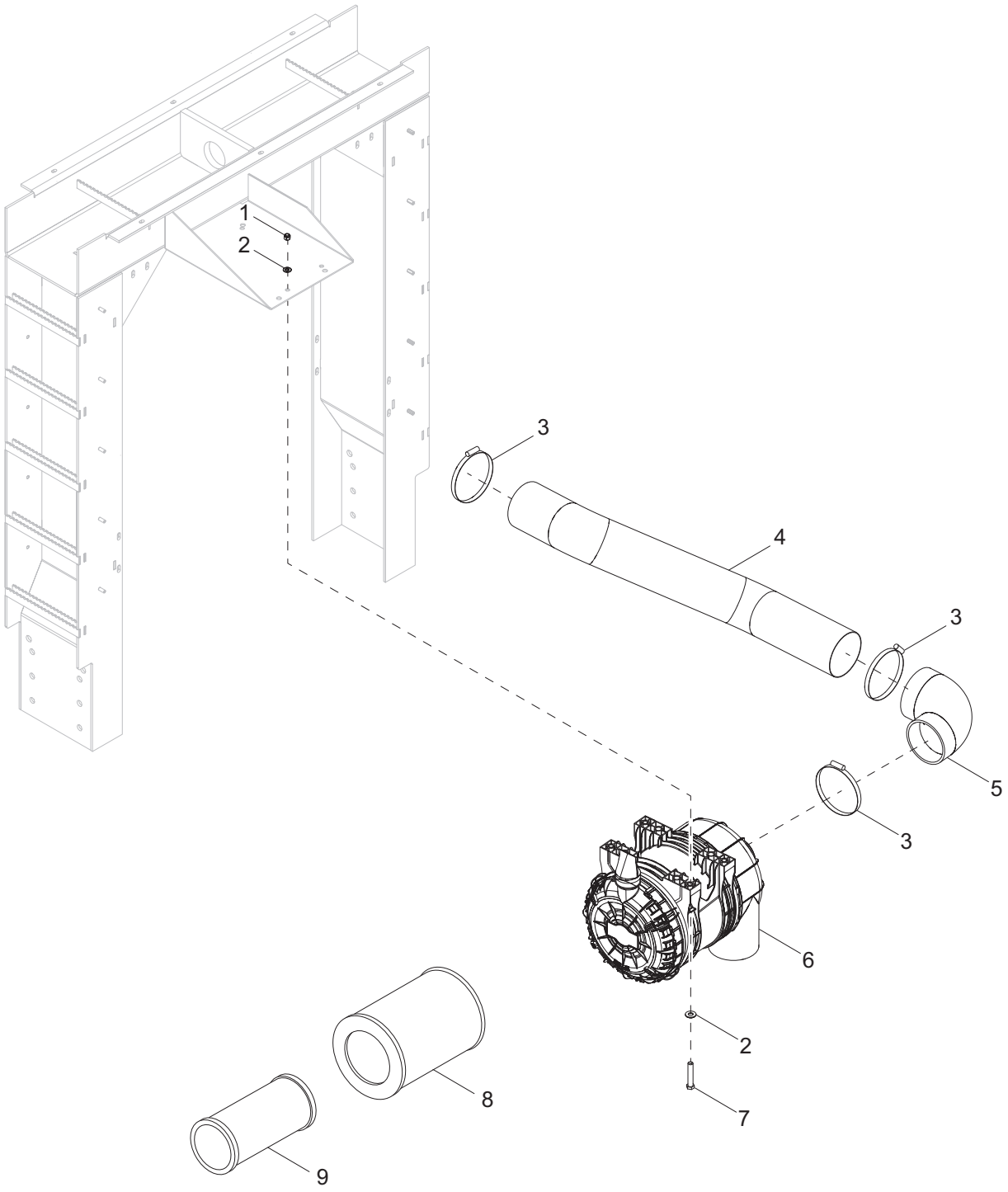


02424

| Item | Part No. | Qty | Description | Notes |
|---|---|---|---|---|
| 1 | 60358 | 4 | Nut, .375-16 nylock, G5 | |
| 2 | 60151 | 8 | Washer, .375 flat | |
| 3 | 20182 | 3 | Clamp, hose - SAE 088 (4.09-6.00) | |
| 4 | 10000019242 | 1 | Pipe, intake | |
| 5 | 10000020081 | 1 | Elbow, 5.00 to 4.50 - molded rubber | |
| 6 | 10000019432 | 1 | Filter, air | w/ elements |
| 7 | 60478 | 4 | Screw, .375-16 x 2.00 standard hex, G5 | |
| 8 | 10000024537 | 1 | Element, primary | |
| 9 | 10000024603 | 1 | Element, secondary | |

# COOLING SYSTEM ASSEMBLY

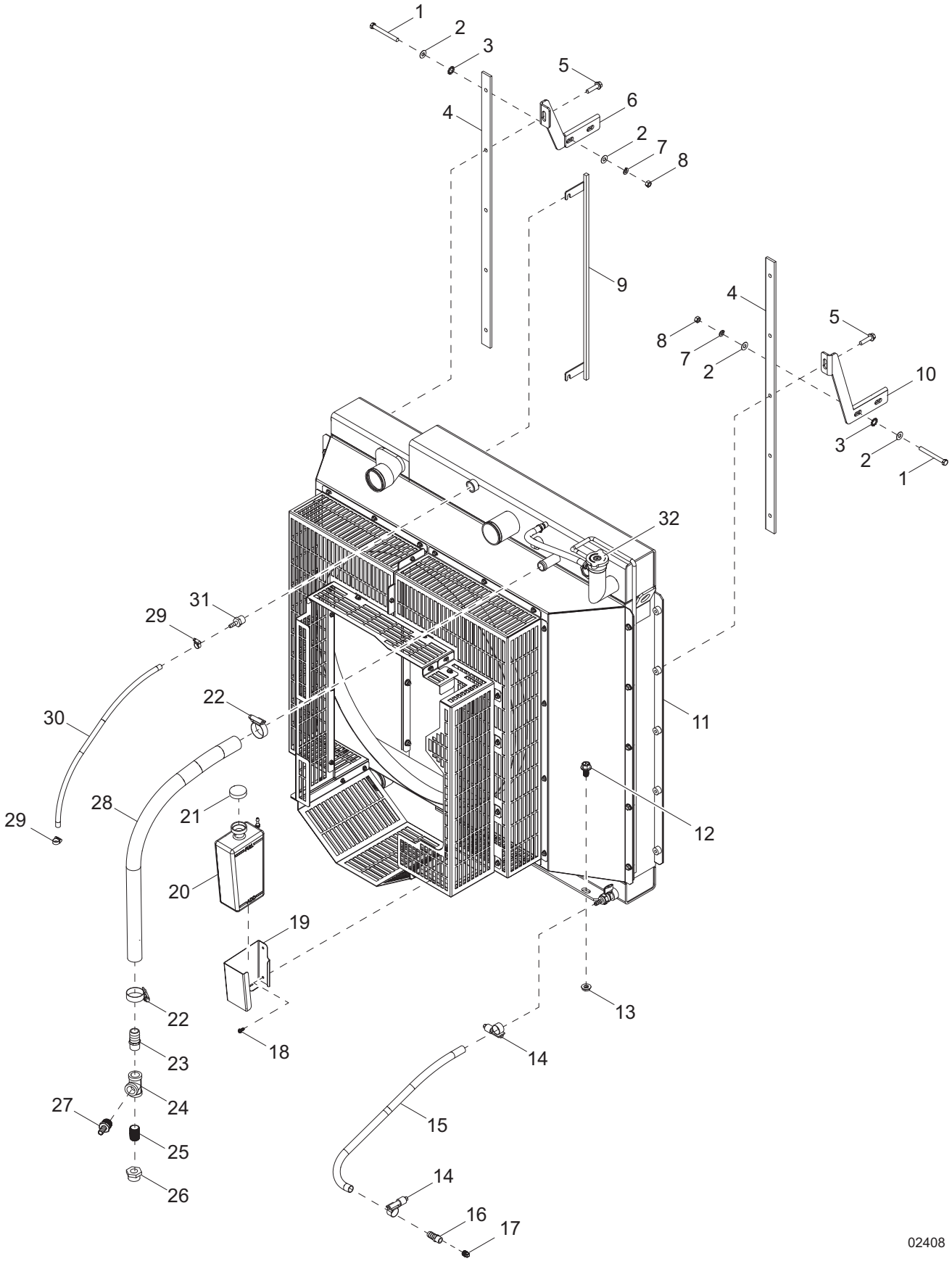

| Item | Part No. | Qty | Description | Notes |
|---|---|---|---|---|
| 1 | 61999 | 4 | Screw, .375-16 x 3.50 standard hex - SS | |
| 2 | 60698 | 8 | Washer, .375 flat - SS | |
| 3 | 61107 | 4 | Washer, .500 external star | |
| 4 | 10000008522 | 2 | Spacer, insulation | |
| 5 | 60487 | 10 | Screw, .375-16 x 1.50 serrated flange hex, G5 | |
| 6 | 10000019954 | 1 | Bracket, radiator support - left | |
| 7 | 60206 | 4 | Washer, .375 split lock | |
| 8 | 60140 | 4 | Nut, .375-16 hex, G5 | |
| 9 | 10000019175 | 1 | Weldment, hose bracket | |
| 10 | 10000020000 | 1 | Bracket, radiator support - right | |
| 11 | 10000019255 | 1 | Radiator | |
| 12 | 61100 | 6 | Screw, .500-13 x 1.00 serrated flange hex, G5 | |
| 13 | 60098 | 6 | Nut, .500-13 serrated flange hex | |
| 14 | 19453 | 2 | Clamp, hose SAE 006 (.37-.87) | |
| 15 | 50051 | 2.5 ft | Hose, fuel .375 ID 50 PSI SAE 30R7 | |
| 16 | 25082 | 1 | Fitting, straight .375MNPT x .375 barb | |
| 17 | 42681 | 1 | Plug, .375 CL150 - sunken hex | |
| 18 | 63358 | 2 | Screw, .250-20 x .625 hex washer head | |
| 19 | 26211B | 1 | Bracket, overflow jug | |
| 20 | 24952 | 1 | Jug, overflow 2.5 quart | |
| 21 | 19714 | 1 | Cap, overflow bottle | |
| 22 | 15422 | 4 | Clamp, hose SAE006 (.37-.87) | |
| 23 | 25496 | 1 | Fitting, straight .750MNPT x 1.00 barb - brass | |
| 24 | 61044 | 1 | Fitting, tee .750NPT - brass | |
| 25 | 62027 | 1 | Fitting, nipple .750NPT x close - brass | |
| 26 | HW4046A126 | 1 | Fitting, M30-2.0 male x .750FNPT | |
| 27 | 40667 | 1 | Fitting, straight .750MNPT x .500 barb - brass | |
| 28 | 50169 | 2.5 ft | Hose, 1.00 inch | |
| 29 | 19453 | 2 | Clamp, hose - SAE 006 (.37-.87) | |
| 30 | 50018 | 1.5 ft | Hose, .312 ID 50 PSI SAE 30R7 | |
| 31 | 60999 | 1 | Fitting, straight .500MNPT x .312 barb - brass | |
| 32 | 39850 | 1 | Cap, radiator | |

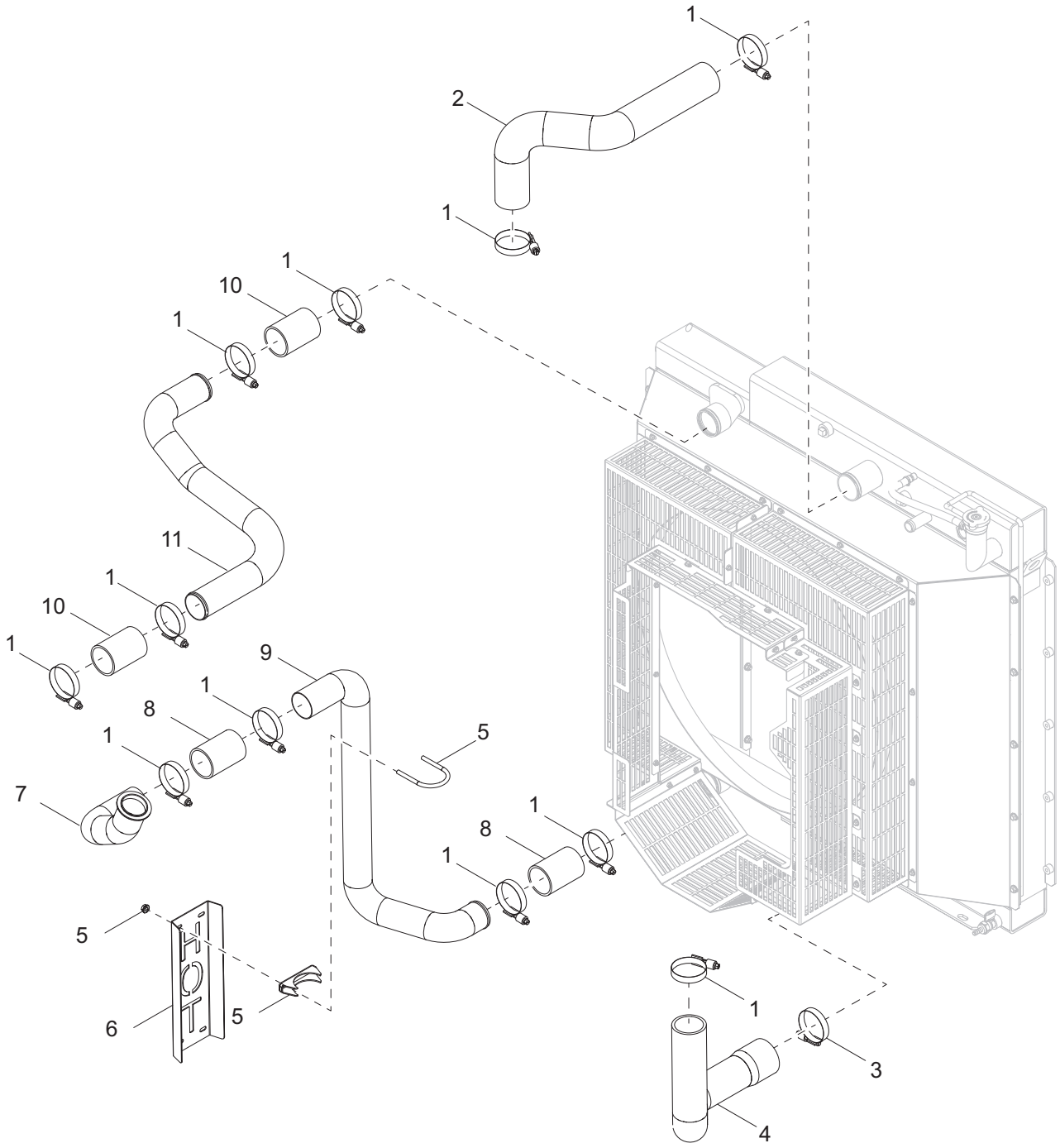


02409

| Item | Part No. | Qty | Description | Notes |
|---|---|---|---|---|
| 1 | 60666 | 11 | Clamp, hose - constant torque 2.25-3.125 | |
| 2 | 53627 | 1 | Hose, radiator input | |
| 3 | 60664 | 1 | Clamp, hose - constant torque 2.75-3.625 | |
| 4 | 53628 | 1 | Hose, radiator output | |
| 5 | 18823 | 1 | Clamp, muffler 2.00 | |
| 6 | 10000019270 | 1 | Guard, heat | |
| 7 | 54225 | 1 | Assembly, CAC pipe - lower | |
| 8 | 22060 | 2 | Hose, CAC 2.00 - 2.50 x 4.00 | |
| 9 | 10000014083 | 1 | Pipe, CAC - lower | |
| 10 | 28541 | 2 | Hose, CAC 2.50 x 4.00 long | |
| 11 | 53630 | 1 | Pipe, CAC - upper | |

# LIFT STRUCTURE

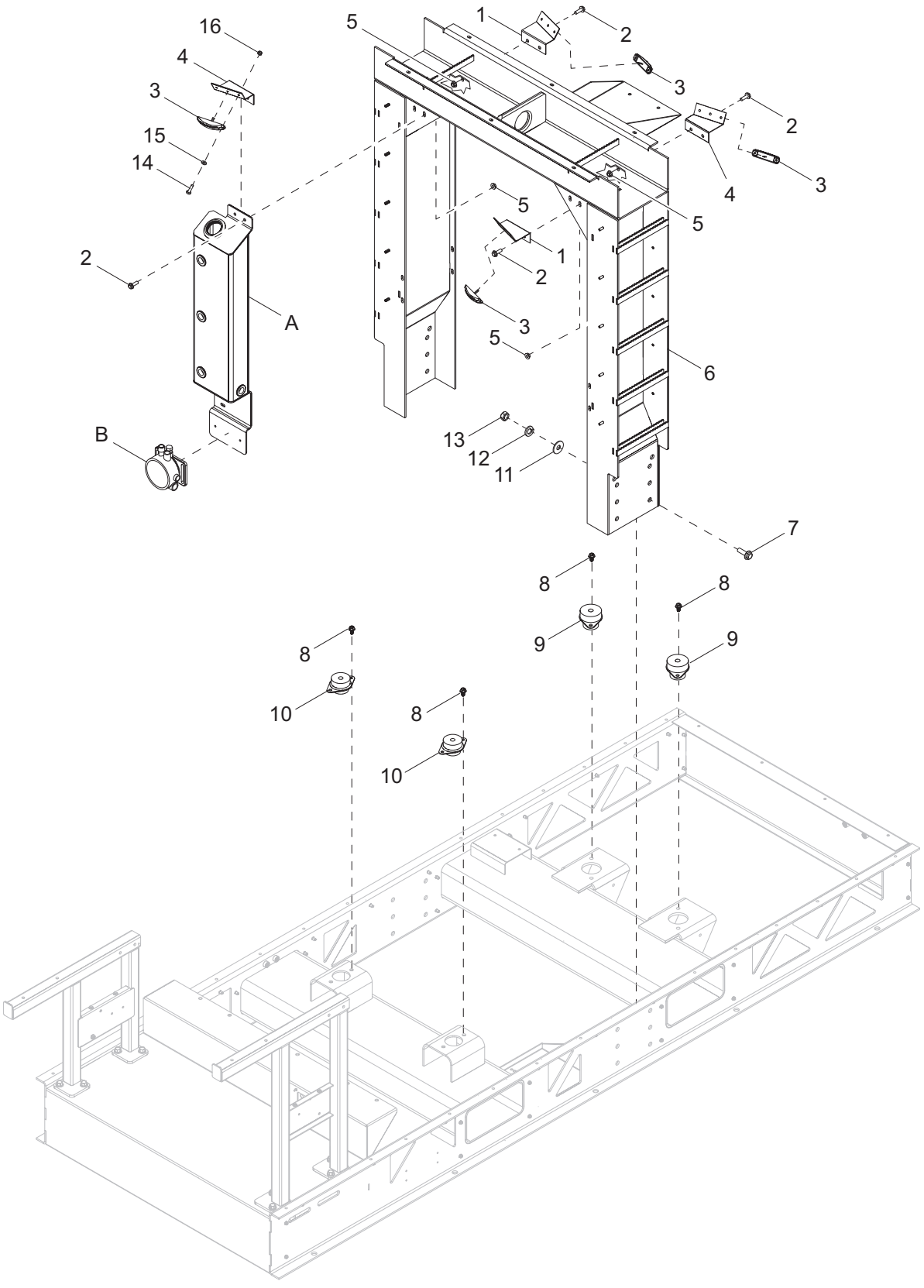


02410

| Item | Part No. | Qty | Description | Notes |
|---|---|---|---|---|
| 1 | 55116B | 2 | Bracket, interior light - left hand | |
| 2 | 60295 | 8 | Screw, .375-18 x .750 standard hex - SS | |
| 3 | 54772 | 4 | Light, LED surface mount | |
| 4 | 55112B | 2 | Bracket, interior light - right hand | |
| 5 | 60145 | 8 | Nut, .375-16 serrated flange, G5 | |
| 6 | 10000020361 | 1 | Weldment, lift structure | |
| 7 | 61078 | 12 | Screw, .625-11 x 2.00 flange hex, G8 | |
| 8 | 62259 | 8 | Screw, M10-1.50 x 30 serrated flange hex, G10.9 | |
| 9 | 10000016256 | 2 | Isolator, rubber 680/1020 | |
| 10 | 52671 | 2 | Isolator, rubber 680/1020 | |
| 11 | 60521 | 12 | Washer, .625 flat 1.743/.108 | |
| 12 | 60194 | 12 | Washer, .625 lock | |
| 13 | 60520 | 12 | Nut, .625-11 hex, G8 | |
| 14 | 60397 | 8 | Screw, 10-32 x 1.00 pan Phillips, G2 | |
| 15 | 60067 | 8 | Washer, #10 flat .435/.060 - SS | |
| 16 | 60061 | 8 | Nut, 10-32 nylock | |
| *Oil Tank (if equipped):* | | | | |
| A | 26631 | 1 | Gauge, oil sight w/level maintainer | |
| B | 56386 | 1 | Weldment, oil tank | |

# ENGINE AND GENERATOR TO UNIT

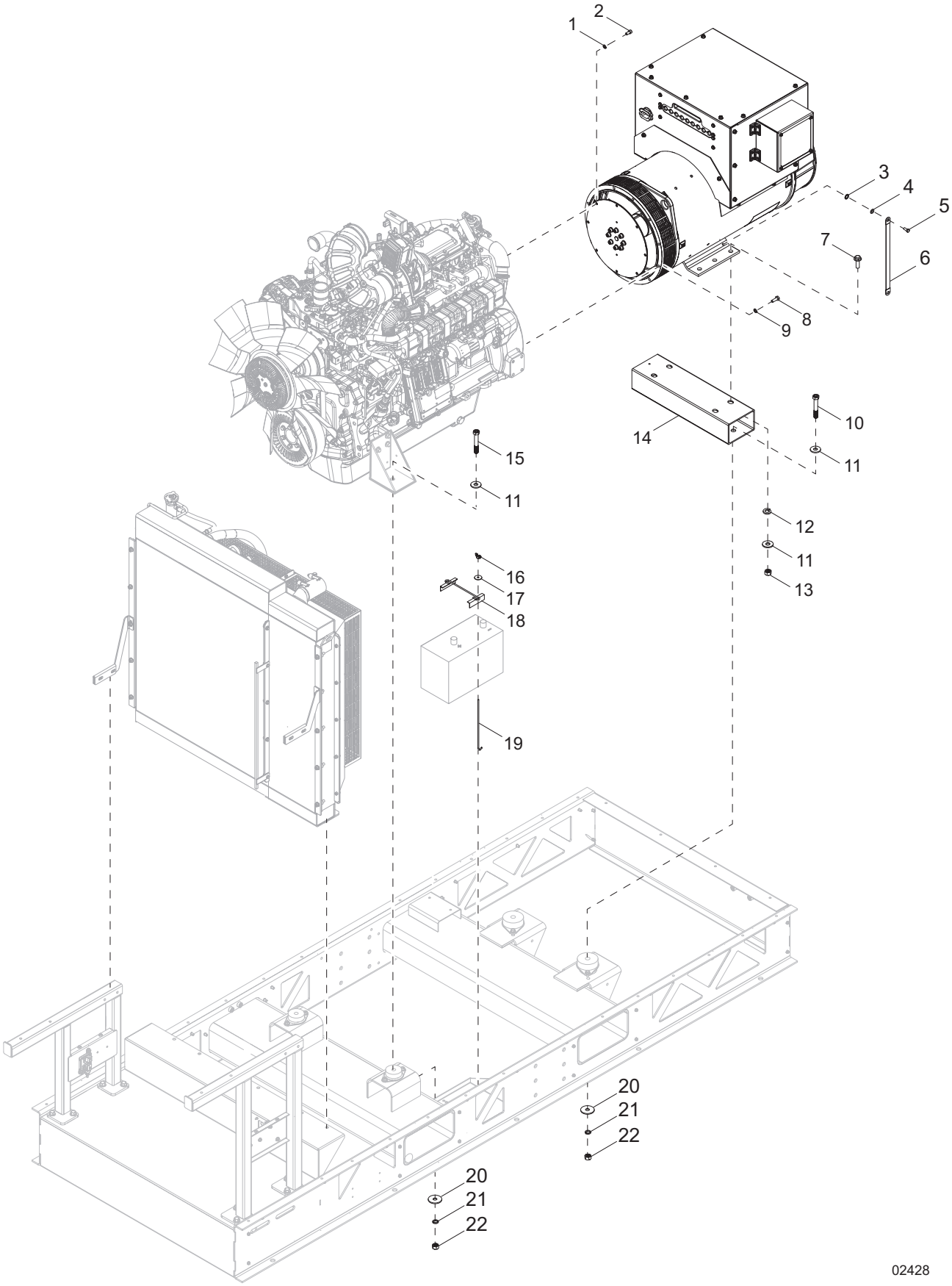

| Item | Part No. | Qty | Description | Notes |
|---|---|---|---|---|
| 1 | 60206 | 8 | Washer, .375 split lock | |
| 2 | 60717 | 8 | Screw, .375-16 x .750 socket hex | |
| 3 | 60369 | 1 | Washer, M12 external star | |
| 4 | 60696 | 1 | Washer, .250 flat .625/.050 - SS | |
| 5 | 60620 | 1 | Screw, .250-20 x 1.00 standard hex - SS | |
| 6 | 22438 | 1 | Strap, braided ground - | |
| 7 | 61078 | 4 | Screw, .625-11 x 2.00 flange hex, G8 | |
| 8 | 60177 | 12 | Screw, M10-1.50 x 30 standard hex, G10.9 | |
| 9 | 60026 | 12 | Washer, M10 split lock | |
| 10 | 42775 | 2 | Screw, .625-11 x 4.50 standard hex, G5 | |
| 11 | 60521 | 8 | Washer, .625 flat 1.743/.108 | |
| 12 | 60194 | 4 | Washer, M16 split lock | |
| 13 | 60520 | 4 | Nut, .625-11 hex, G8 | |
| 14 | 10000016316 | 1 | Spacer, generator | |
| 15 | 69924 | 2 | Screw, .625-11 x 4.00 standard hex, G8 | |
| 16 | 60090 | 2 | Nut, .250-20 wing, G5 | |
| 17 | 60089 | 2 | Washer, .265 fender | |
| 18 | 14682 | 1 | Bracket, battery hold-down | |
| 19 | 14146 | 2 | Bolt, J .250-20 x 10.00 | |
| 20 | 18086 | 4 | Washer, .650 snub 2.250/.180 | |
| 21 | 60194 | 4 | Washer, M16 split lock | |
| 22 | 60520 | 4 | Nut, .625-11 hex, G8 | |

# ENGINE BLOCK HEATER (IF EQUIPPED)

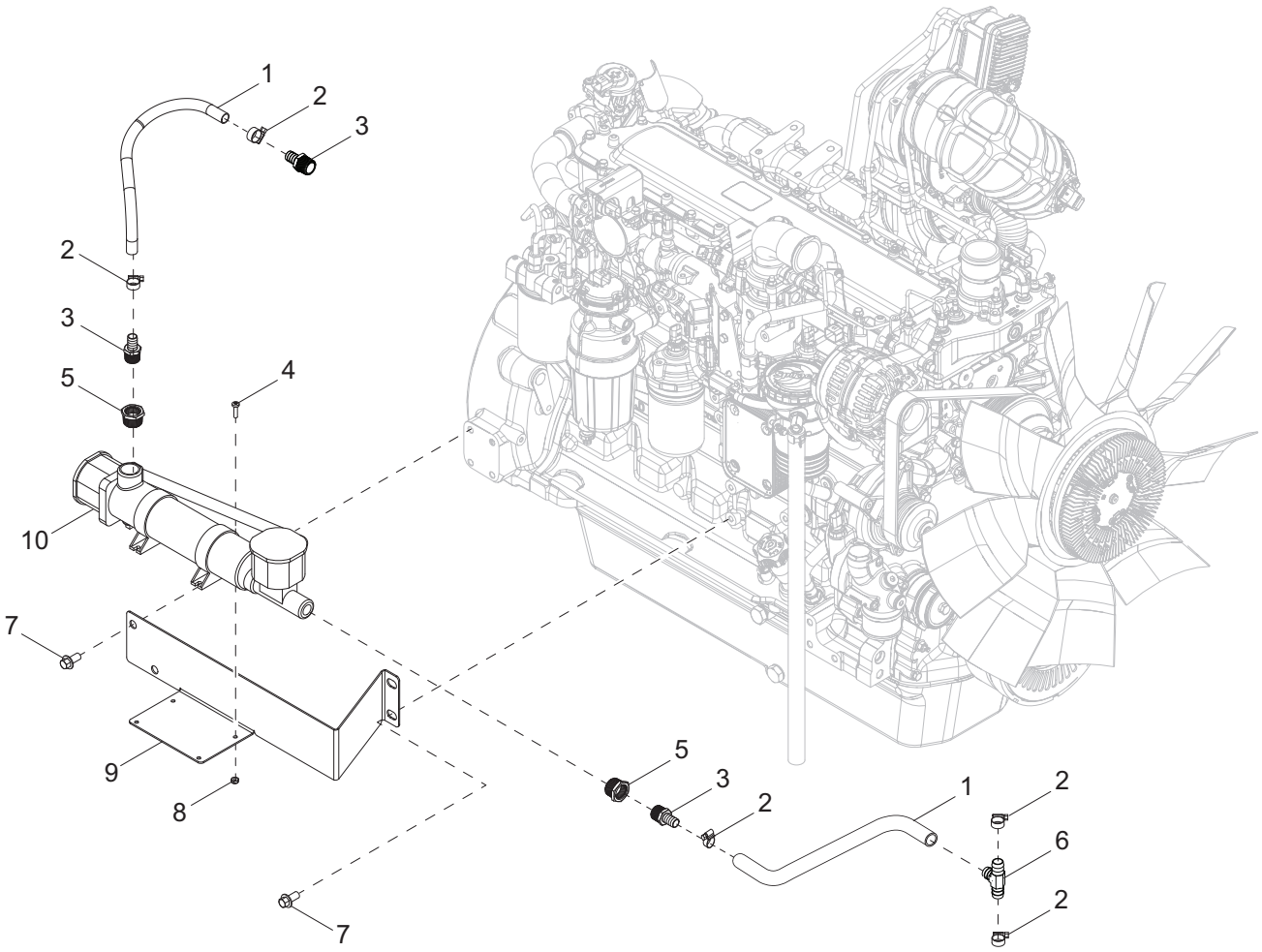

| Item | Part No. | Qty | Description | Notes |
|---|---|---|---|---|
| 1 | 50201 | 2 | Hose, .625 Horizon 200PSI, class A | |
| 2 | 19453 | 6 | Clamp, hose - SAE 006 (.37 - .87) | |
| 3 | 62076 | 3 | Fitting, straight .750MNPT x .625 barb - brass | |
| 4 | 60062 | 4 | Screw, 10-32 x .750 pan Phillips, G2 | |
| 5 | 24006 | 2 | Fitting, straight 1.00MNPT x .750FNPT | |
| 6 | 0C9079D | 1 | Fitting, .375 tee, barbed - brass | |
| 7 | 60072 | 4 | Screw, M12-1.75 x 25 serrated flange hex, G10.9 | |
| 8 | 60415 | 4 | Nut, 10-32 nylock - SS | |
| 9 | 10000009261 | 1 | Bracket, block heater | |
| 10 | 28407 | 1 | Heater, coolant 400-500CI, 120V 2500W | |

# ENGINE ASSEMBLY

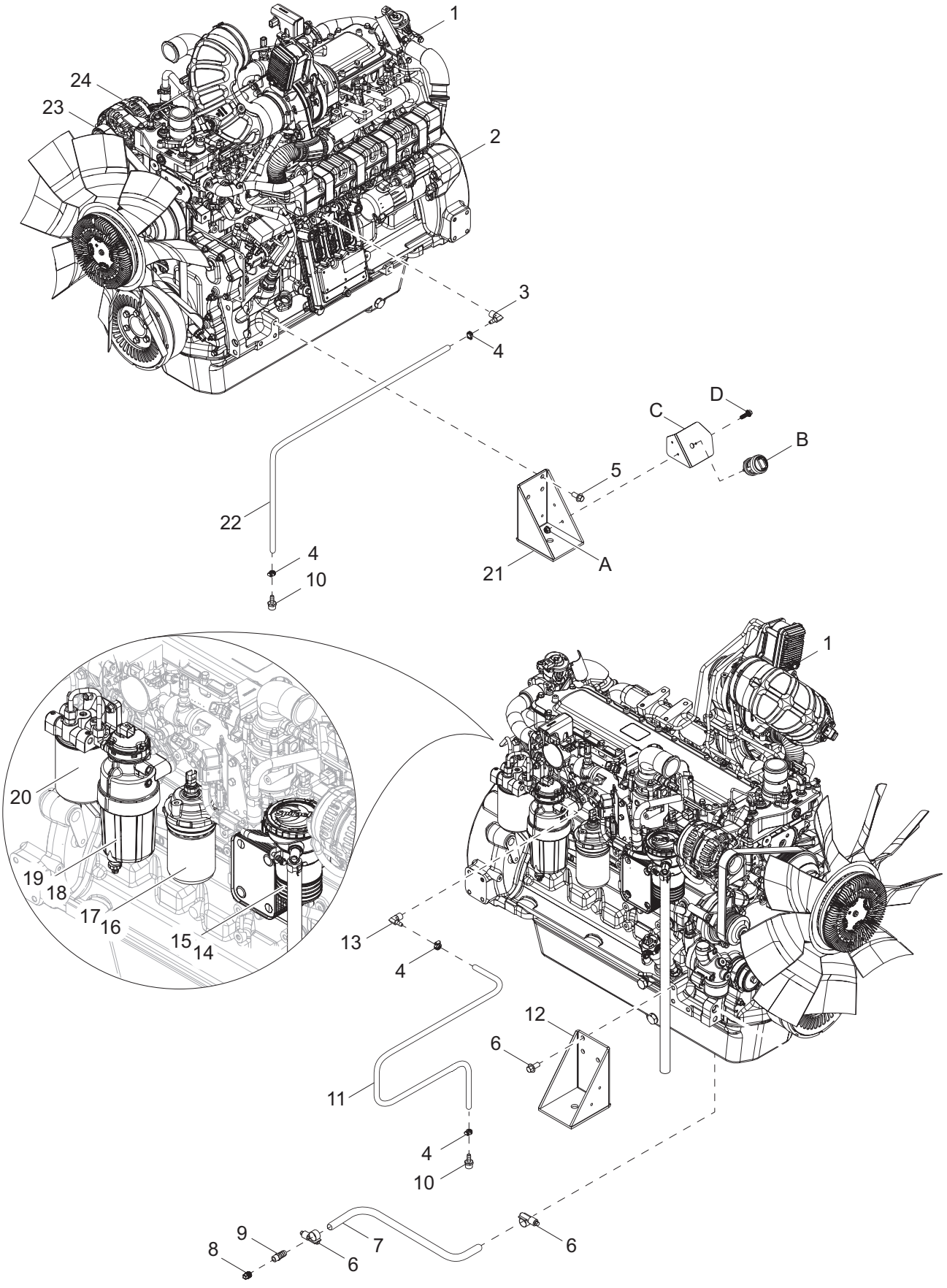

| Item | Part No. | Qty | Description | Notes |
|---|---|---|---|---|
| 1 | 51399 | 1 | Engine, JD, 160KW, 6068HFG06, tier 4F | |
| 2 | 10000012633 | 1 | Starter | |
| 3 | 33413 | 1 | Fitting, 90°, M12 x 1.50 x .375 barb | |
| 4 | 14216 | 4 | Clamp, hose SAE004 (.21-.62) | |
| 5 | 60072 | 6 | Screw, M12-1.75 x 25 serrated flange hex, G10.9 | |
| 6 | 60365 | 2 | Clamp, hose SAE 010 (.56-1.06) | |
| 7 | 50201 | 5.0 ft | Hose, .625 class A - 200PSI | |
| 8 | 42681 | 1 | Plug, .375 CL15o - sunken hex | |
| 9 | 25931 | 1 | Fitting, straight - .375NPT x .625 barb | |
| 10 | 23816 | 2 | Fitting, straight .500MNPT x .375 barb - brass | |
| 11 | 50051 | 6.0 ft | Hose, fuel .375 ID SAE30R7 - 50 PSI | |
| 12 | 51761B | 1 | Mount, engine - right | |
| 13 | 33414 | 1 | Fitting, 90°, M14 x 1.50 x .375 barb | |
| 14 | 10000012606 | 1 | Cannister, OVR | |
| 15 | 10000012632 | 1 | Filter, OVR | |
| 16 | 32245 | 1 | Filter, oil | |
| 17 | 10000018100 | 1 | O-ring, oil filter | |
| 18 | 10000018039 | 1 | Filter, fuel - primary | |
| 19 | 10000018052 | 1 | Gasket Kit, fuel filter | |
| 20 | 10000018016 | 1 | Filter, fuel - secondary | |
| 21 | 51762B | 1 | Mount, engine - left | |
| 22 | 50051 | 6.0 ft | Hose, fuel .375 ID SAE30R7 - 50 PSI | |
| 23 | 10000012588 | 1 | Belt, fan | |
| 24 | 33026 | 1 | Alternator | |
| *Lockable Battery Disconnect Switch (if equipped):* | | | | |
| A | 60161 | 2 | Nut, .250-20 | |
| B | MAC3907-1 | 1 | Switch, lockable battery disconnect | |
| C | 10000019619 | 1 | Bracket, battery disconnect | |
| D | 60523 | 2 | Screw, .250-20 x .875 serrated flange hex | |

***Note:*** *Engine parts used in all Generac Mobile Products, LLC equipment carry the Original Equipment Manufacturer (OEM) warranty unless otherwise stated. OEM warranty parts must be purchased through an OEM dealer. Please contact Generac Mobile Products, LLC with questions*

# GENERATOR ASSEMBLY

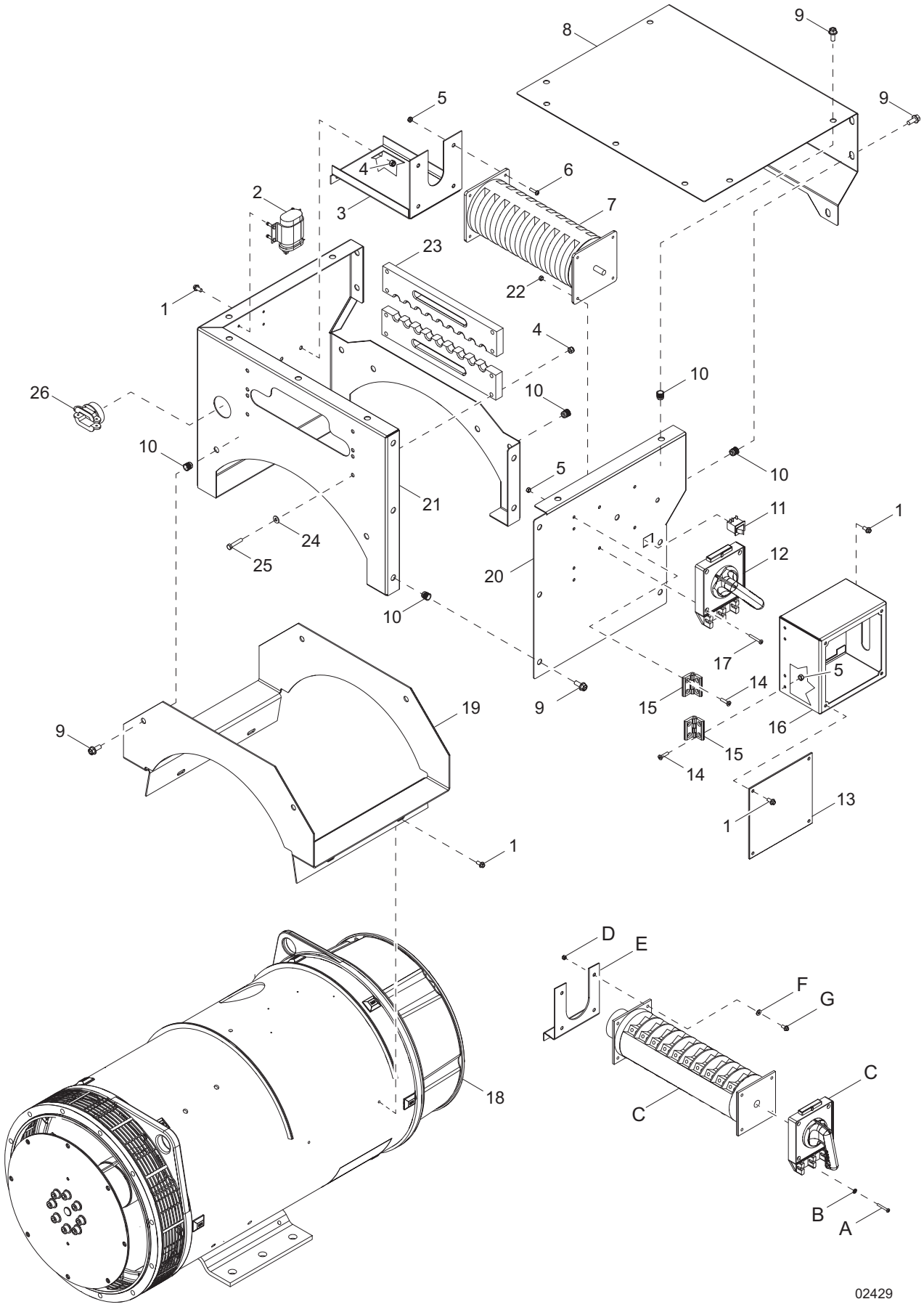

| Item | Part No. | Qty | Description | Notes |
|---|---|---|---|---|
| 1 | 60175 | 12 | Screw, .250-20 x .500 serrated flange hex, G5 | |
| 2 | 65308 | 1 | Capacitor, 7.5 uF, 370 VAC | |
| 3 | 10000021452 | 1 | Bracket, phase switch, 3-position | |
| 4 | 60144 | 15 | Nut, .250-20 nylock, G5 | |
| 5 | 60061 | 4 | Nut, 10-32 nylock | |
| 6 | 61180 | 4 | Screw, 10-32 x .750 pan Phillips - SS | |
| 7 | 18103 | 1 | Switch, phase 315A, 3-position | |
| 8 | 10000021119 | 1 | Panel, generator box - top | |
| 9 | 60616 | 24 | Screw, .312-18 x 750 serrated flange, G5 | |
| 10 | 62133 | 24 | Insert. threaded .312.18 splined .027-.150 grip | |
| 11 | 12632 | 1 | Switch, trigger safety, N.O. & N.C. | |
| 12 | 65799 | 1 | Switch plate, phase switch | |
| 13 | 55041 | 1 | Lens, phase switch door | |
| 14 | 73124 | 8 | Screw, 10-24 x .875 flat head Phillips | |
| 15 | 35394 | 2 | Hinge, door - small | |
| 16 | 55024 | 1 | Cover, phase selector | |
| 17 | 60167 | 7 | Screw, M5-0.80 x 35 pan Phillips , G4.8 | |
| 18 | 51392 | 1 | Generator, Marathon 363CSL1607 | |
| 19 | 26267 | 1 | Panel. generator box adapter | |
| 20 | 10000021137 | 1 | Panel, phase switch | |
| 21 | 10000021141 | 1 | Enclosure, generator box - MDG150 | |
| 22 | 60038 | 4 | Nut, M5-.80 nylock, G6 | |
| 23 | 56346 | 2 | Plate, cable support | |
| 24 | 60696 | 8 | Washer, .250 flat - SS | |
| 25 | 60414 | 8 | Screw, .250-20 x 1.50 standard hex, G5 | |
| 26 | 65239 | 1 | Strain relief | |

*4 Position Phase Switch (if equipped):*

| | | | | |
|---|---|---|---|---|
| A | 62046 | 4 | Screw, 10-32 x 1.50 pan Phillips - SS | |
| B | 60067 | 4 | Washer, #10 flat .435/.060 - SS | |
| C | 65688 | 1 | Switch, Phase - 400A 4 position | |
| D | 60038 | 4 | Nut, M5-.080 nylock, G6 | |
| E | 10000023063 | 1 | Bracket, phase switch, 4 position | |
| F | 60041 | 4 | Washer, M5 flat | |
| G | 60167 | 4 | Screw, M5-0.80 x 35 pan Phillips, G4.8 | |

***Note:*** *Generator parts used in all Generac Mobile Products, LLC equipment carry the Original Equipment Manufacturer (OEM) warranty unless otherwise stated. OEM warranty parts must be purchased through an OEM dealer. Please contact Generac Mobile Products, LLC with questions*

# EXHAUST & AFTER TREATMENT ASSEMBLY

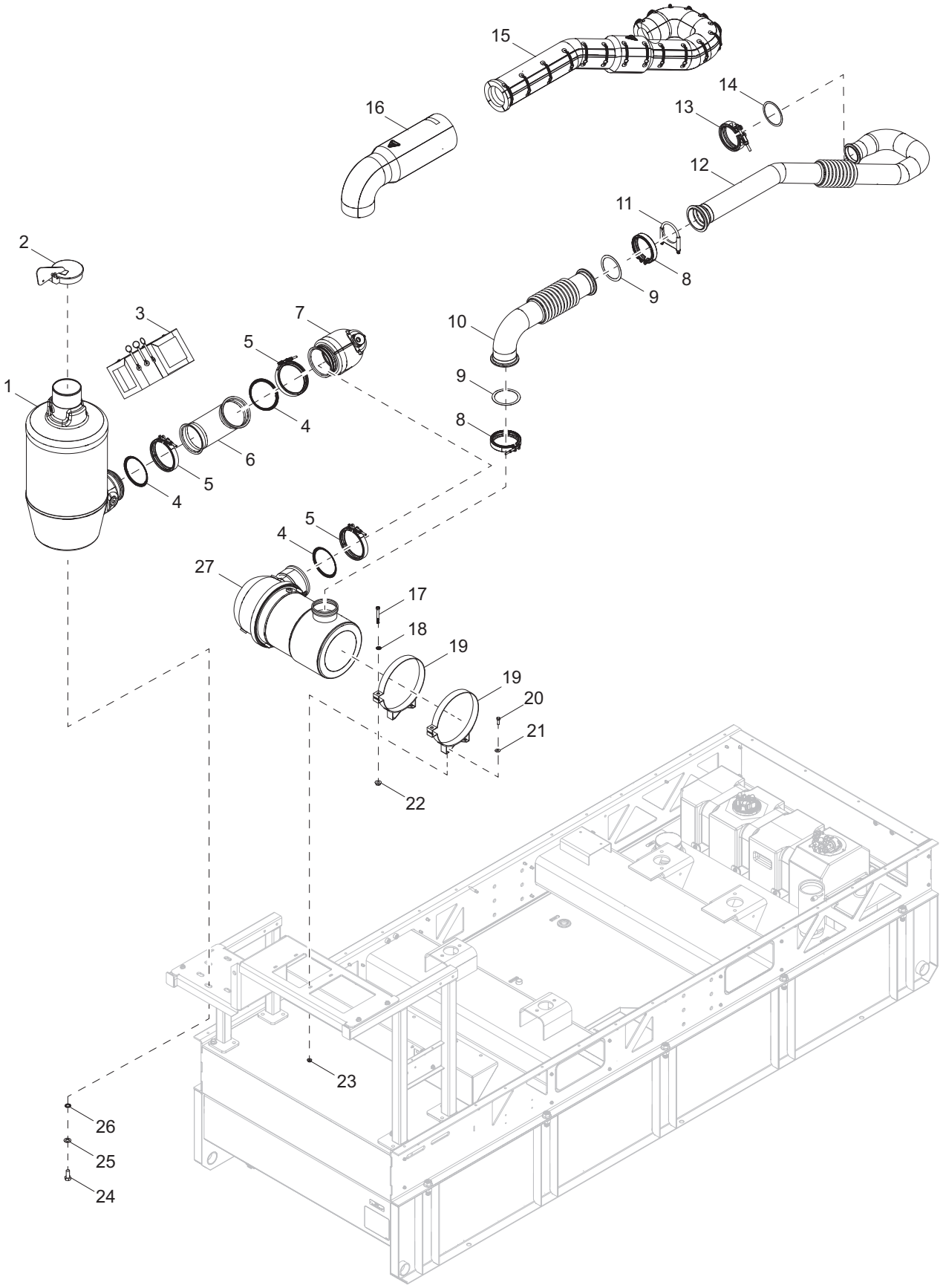


02420

| Item | Part No. | Qty | Description | Notes |
|---|---|---|---|---|
| 1 | 53488 | 1 | SCR module | |
| 2 | 21096 | 1 | Cap, rain - 5.00 inch | |
| 3 | 54785 | 1 | Blanket, insulated exhaust elbow | |
| 4 | 33231 | 3 | Gasket, 5.00 exhaust DPF flange | |
| 5 | 10000011754 | 3 | Clamp, v-band | |
| 6 | 53684 | 1 | Elbow, SCR | |
| 7 | 53787 | 1 | Tube, decomp | |
| 8 | 31861 | 2 | Clamp, v-band 5.00 inch | |
| 9 | 33185 | 2 | Gasket, 4.0 exhaust pipe flange | |
| 10 | 10000018962 | 1 | Weldment, DOC inlet pipe | |
| 11 | 10000020242 | 1 | Clamp, guillotine 3.50 | |
| 12 | 10000018899 | 1 | Pipe, turbo | |
| 13 | 10000013128 | 1 | Clamp, v-band 3.84 | |
| 14 | 10000013131 | 1 | Gasket, 3.25 ID x 3.75 OD - high temperature | |
| 15 | 10000019073 | 1 | Blanket, turbo pipe | |
| 16 | 10000018954 | 1 | Blanket, DOC inlet pipe | |
| 17 | 60147 | 2 | Screw, .375-16 x 3.50 standard hex, G5 | |
| 18 | 60698 | 2 | Washer, .375 flat - SS | |
| 19 | 21094 | 2 | Clamp, air filter | |
| 20 | 60507 | 4 | Screw, .312-18 x 1.00 standard hex - SS | |
| 21 | 60340 | 4 | Washer, .312 flat - SS | |
| 22 | 60145 | 2 | Nut, .375-16 serrated flange, G5 | |
| 23 | 60095 | 4 | Nut, .312-18 serrated flange | |
| 24 | 44531 | 7 | Screw, M16-2.00 x 30 standard hex, G8.8 | |
| 25 | 60194 | 7 | Washer, M16 split lock | |
| 26 | 60193 | 7 | Washer, M16 flat | |
| 27 | 53487 | 1 | DOC module | |

***Note:*** *DEF parts used in all Generac Mobile Products, LLC equipment carry the Original Equipment Manufacturer (OEM) warranty unless otherwise stated. OEM warranty parts must be purchased through an OEM dealer. Please contact Generac Mobile Products, LLC with questions*

# EXHAUST SUPPORT & DEF ASSEMBLY

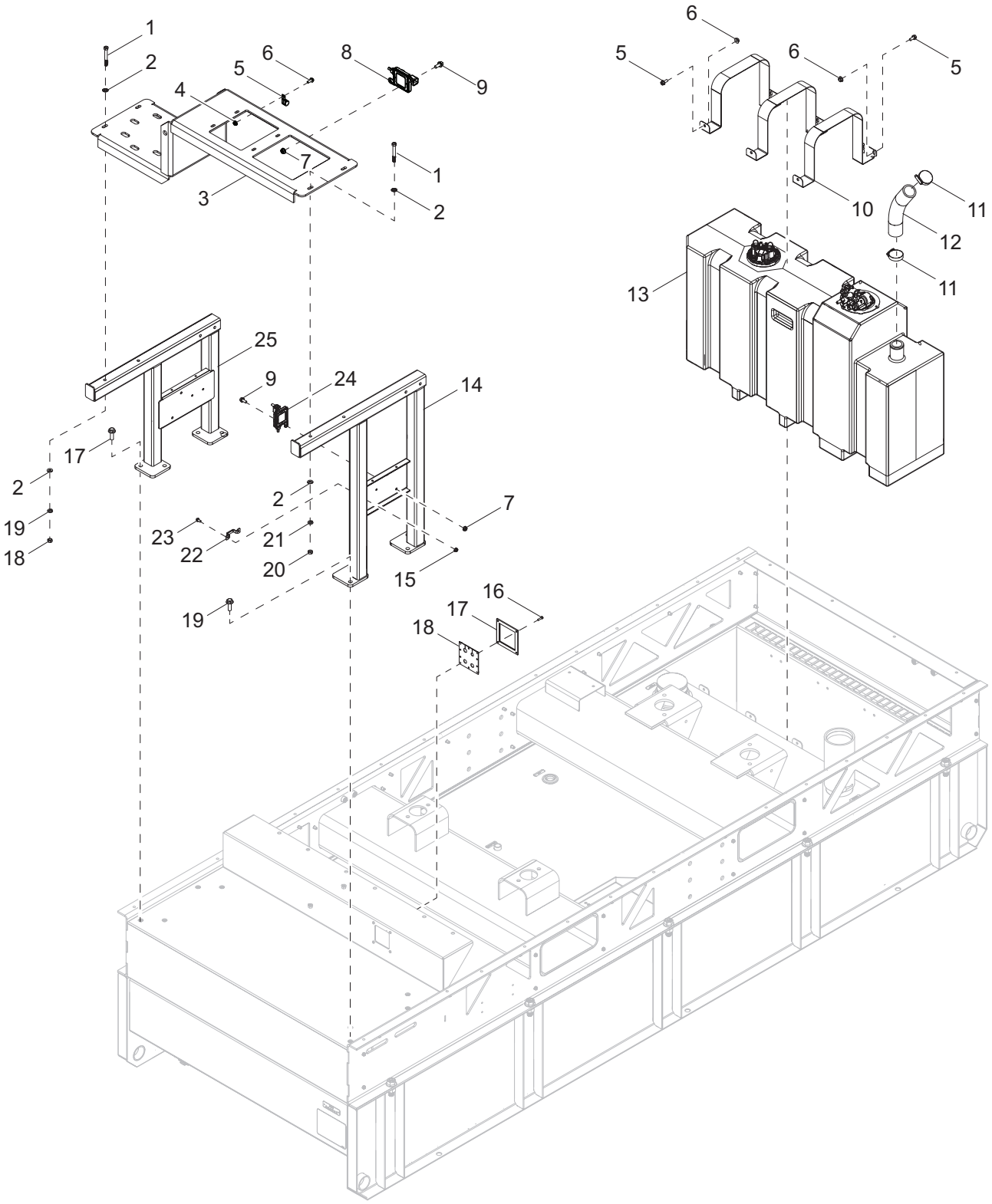

| Item | Part No. | Qty | Description | Notes |
|---|---|---|---|---|
| 1 | 60400 | 4 | Screw, .375-16 x 3.00 standard hex,G5 | |
| 2 | 60151 | 8 | Washer, .375 flat | |
| 3 | 10000018663 | 1 | Bracket, after-treatment | |
| 4 | 60036 | 4 | Nut, M6-1.00 serrated flange, G8.8 | |
| 5 | 16143 | 4 | Clamp, tubing .500 | |
| 6 | 60087 | 4 | Screw, M6-1.00 x 16 serrated flange hex, G8.8 | |
| 7 | 60095 | 13 | Nut, .312-18 serrated flange | |
| 8 | 10000025293 | 1 | JD NOX ECU 2 | |
| 9 | 60616 | 13 | Screw, .312-18 x .750 serrated flange hex, G5 | |
| 10 | 10000018545 | 3 | Strap, DEF tank | |
| 11 | 60316 | 2 | Clamp, hose SAE 032 (1.56-2.50) | |
| 12 | 10000021160 | 1 | Hose, DEF fill | |
| 13 | 54115 | 1 | Assembly, DEF tank, 25 gallon | |
| 14 | 10000018822 | 1 | Bracket, exhaust - DOC side | |
| 15 | 60161 | 2 | Nut, .250-20 serrated flane, G5 | |
| 16 | 61196 | 4 | Screw, 10-23 x .750 standard hex - SS | |
| 17 | 54926B | 1 | Clamp plate, bulkhead DEF | |
| 18 | 51466 | 1 | Bulkhead, DEF - rubber | |
| 19 | 61103 | 4 | Screw, .500-13 x 1.750 serrated flange hex | |
| 20 | 60140 | 4 | Nut, .375-16 hex, G5 | |
| 21 | 60206 | 4 | Washer, .375 split lock | |
| 22 | 10000025247 | 1 | JD temp sensor clamp | |
| 23 | 60175 | 2 | Screw, .250-20 x .500 serrated flange hex, G5 | |
| 24 | 10000025293 | 1 | JD NOX ECU 1 | |
| 25 | 10000018985 | 1 | Bracket, mount SCR side | |

***Note:*** *DEF parts used in all Generac Mobile Products, LLC equipment carry the Original Equipment Manufacturer (OEM) warranty unless otherwise stated. OEM warranty parts must be purchased through an OEM dealer. Please contact Generac Mobile Products, LLC with questions*

# SKID AND FUEL TANK ASSEMBLY

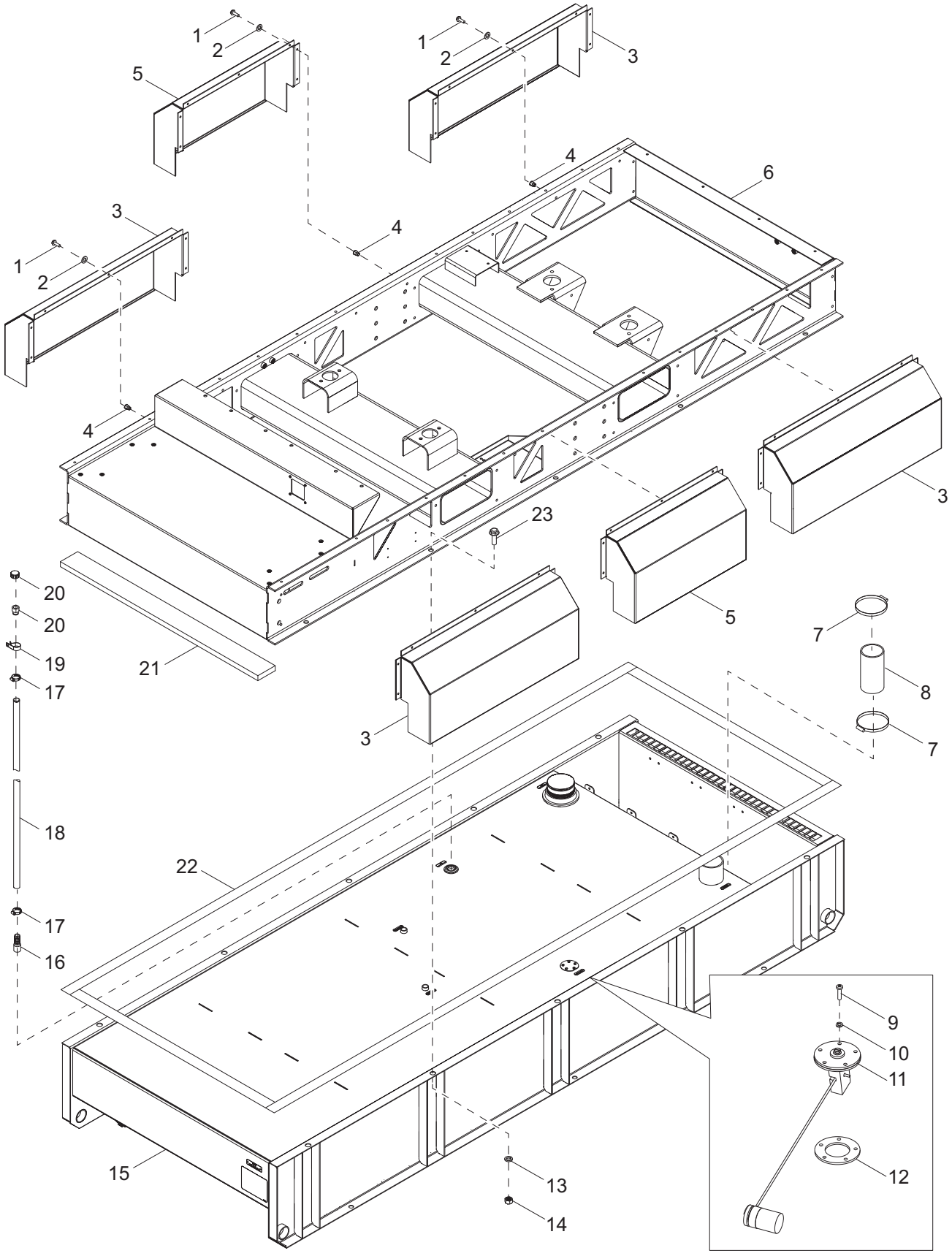

| Item | Part No. | Qty | Description | Notes |
|---|---|---|---|---|
| 1 | 68070 | 42 | Screw, .250-20 x .1.0 button hex, SS | |
| 2 | 60704 | 42 | Washer, .250 split lock, SS | |
| 3 | 54692B | 4 | Panel, rain guard - side | |
| 4 | 56551 | 42 | Insert, .250-20 splined .165-.260, threaded | |
| 5 | 54695B | 2 | Panel, rain guard - middle side | |
| 6 | 10000020418 | 1 | Weldment, skid | |
| 7 | 19842 | 2 | Clamp, hose - SAE072 (4.06-5.00) | |
| 8 | 10000020236 | 1 | Hose, fuel 4.0 I.D. x 8.50 | |
| 9 | 60062 | 5 | Screw, 10-32 x .750 pan Phillips, G2 | |
| 10 | 60252 | 5 | Washer, #10 split lock | |
| 11 | 21206 | 1 | Sender, fuel 16-24 inch, right hand | |
| 12 | 22323 | 1 | Gasket, fuel sender | |
| 13 | 60248 | 10 | Washer, .750 split lock | |
| 14 | 60249 | 10 | Nut, .750-10 hex, G8 | |
| 15 | 10000015046 | 1 | Tank, fuel 343 gallon - single wall | |
| 16 | 20162 | 1 | Fitting, straight 1.00NPT x 1.00 barb - plain | |
| 17 | 19336 | 2 | Clamp, hose - SAE 044 (2.31-3.25) | |
| 18 | 50019 | 5.0 ft | Hose, fuel 1.00 SAE 203R | |
| 19 | 60716 | 1 | Clamp, tubing 1.50 light -duty | |
| 20 | 26379 | 1 | Vent, fuel 1.00 I.D. - plastic | |
| 21 | 10000019063 | 1 | Foam, front fuel tank | |
| 22 | 54922 | 1 | Gasket, 1.00 x .250 | |
| 23 | 63111 | 10 | Screw, .750-10 x 2.25 flange hex, G8 | |

# TRAILER ASSEMBLY

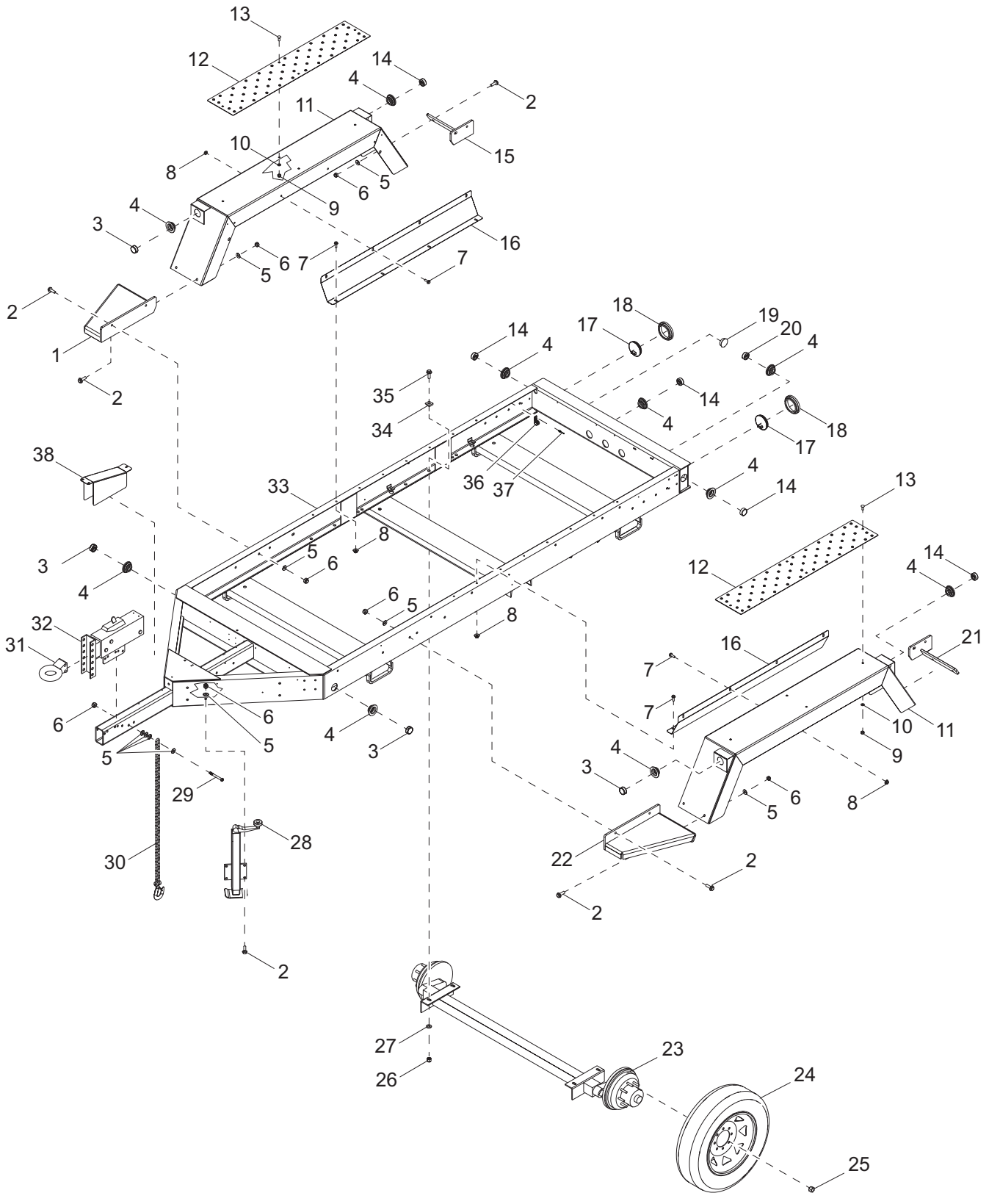

| Item | Part No. | Qty | Description | Notes |
|---|---|---|---|---|
| 1 | 22360B | 1 | Weldment, front step - right hand | |
| 2 | 61103 | 20 | Screw,500-13 x 1.75 serrated flange hex | |
| 3 | 66702 | 4 | Light, clearance 2.0” LED - amber | |
| 4 | 66394 | 14 | Grommet, sealed beam light 2.0” - rubber | |
| 5 | 60416 | 28 | Washer, .500 flat .375/.090 | |
| 6 | 62221 | 22 | Nut, .500-13 nylock, G5 | |
| 7 | 60517 | 16 | Screw, .375-16 x 1.00 serrated flange hex | |
| 8 | 60145 | 16 | Nut, .375-16 serrated flange, G5 | |
| 9 | 60358 | 8 | Nut, .375-16 nylock, G5 | |
| 10 | 60698 | 8 | Washer, .375 flat .875/.040 - SS | |
| 11 | 54212B | 2 | Weldment, fender, large trailer | |
| 12 | 54215B | 2 | Plate, anti-skid - diamond plate | |
| 13 | 60790 | 8 | Screw, .375-16 x 1.00 carriage - SS | |
| 14 | 66703 | 7 | Light clearance 2.0” LED - red | |
| 15 | 26877B | 1 | Weldment, rear step - right hand | |
| 16 | 22351B | 2 | Shield, fender - large trailer | |
| 17 | 10221 | 2 | Grommet, rear light 4.50” - rubber | |
| 18 | 66701 | 2 | Light, stop/tail/turn 4.0” LED | |
| 19 | 62161 | 1 | Plug, hole 2.25 diameter. - black | |
| 20 | 66704 | 1 | Light, utility 2.0” LED - clear | |
| 21 | 26876B | 1 | Weldment, rear step - left hand | |
| 22 | 22359B | 1 | Weldment, front step - left hand | |
| 23 | 22590 | 2 | Axle, 7000# Torflex | |
| 24 | 22592B | 4 | Wheel, ST235/80R16 - black | |
| 25 | 60096 | 32 | Nut, ..500-20 lug,G5 | |
| 26 | 60240 | 8 | Nut, .625-11 nylock, G5 | |
| 27 | 60193 | 8 | Washer, M16 flat | |
| 28 | 27318B | 1 | Weldment, jack - large trailer | |
| 29 | 60376 | 2 | Screw, 500-13 x 4.50 hex, G5 | |
| 30 | 20159 | 2 | Chain, trailer safety - .375”  hi test | |
| 31 | 19335B | 1 | Coupler, lunette ring 3.0 ID - adjustable | |
| 32 | 18373 | 1 | Actuator, trailer | |
| 33 | 27655B | 1 | Weldment, trailer frame | |
| 34 | 60651 | 8 | Washer, square bevel .626 gauge | |
| 35 | 61078 | 8 | Screw, .625-11 x 2.00 flange hex, G8 | |
| 36 | 16143 | 12 | Clamp, tubing .500 | |
| 37 | 61155 | 12 | Rivet, .188 diameter x .438-.750 grip | |
| 38 | 22302B | 1 | Cover, brake line | |

# AXLE ASSEMBLY

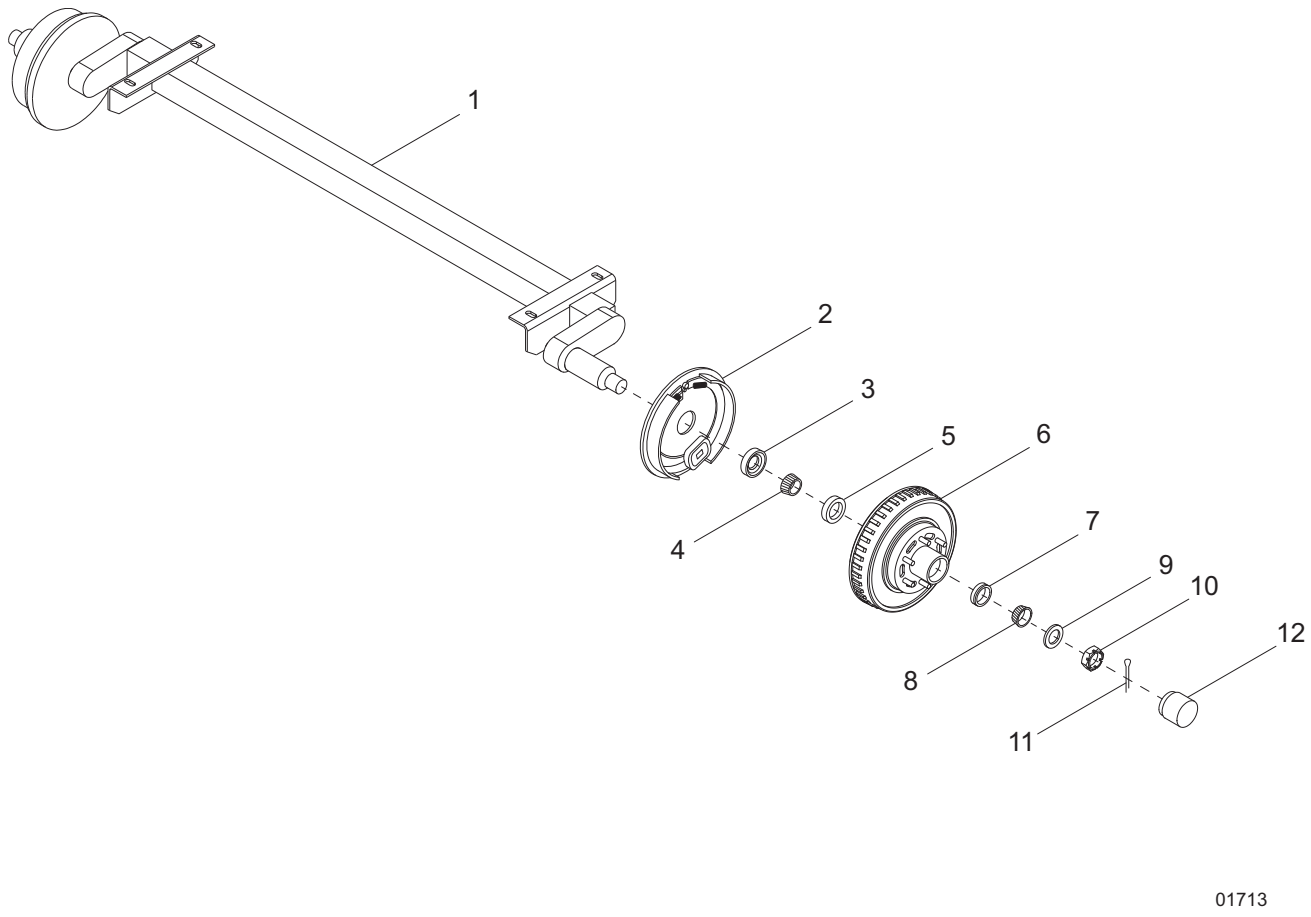

| Item | Part No. | Qty | Description | Notes |
|---|---|---|---|---|
| 1 | 22590 | 1 | Axle, 7000# - 57.0 inch frame | |
| 2 | 26571 | 1 | Assembly, surge-free backing brake - left | |
| -- | 26572 | 1 | Assembly, surge-free backing brake - right | |
| 3 | 26575 | 2 | Seal, inner grease 2.25 inch | |
| 4 | 26576 | 2 | Bearing, inner hub | |
| 5 | 26577 | 2 | Cup, inner bearing | |
| 6 | 26578 | 2 | Drum, brake - 12.0 inch | |
| 7 | 26579 | 2 | Cup, outer bearing | |
| 8 | 26580 | 2 | Bearing, outer hub | |
| 9 | 26581 | 2 | Washer, spindle | |
| 10 | 12308 | 2 | Nut, spindle | |
| 11 | 26583 | 2 | Pin, cotter | |
| 12 | 26582 | 2 | Cap, dust | |

# BRAKE LINE ASSEMBLY

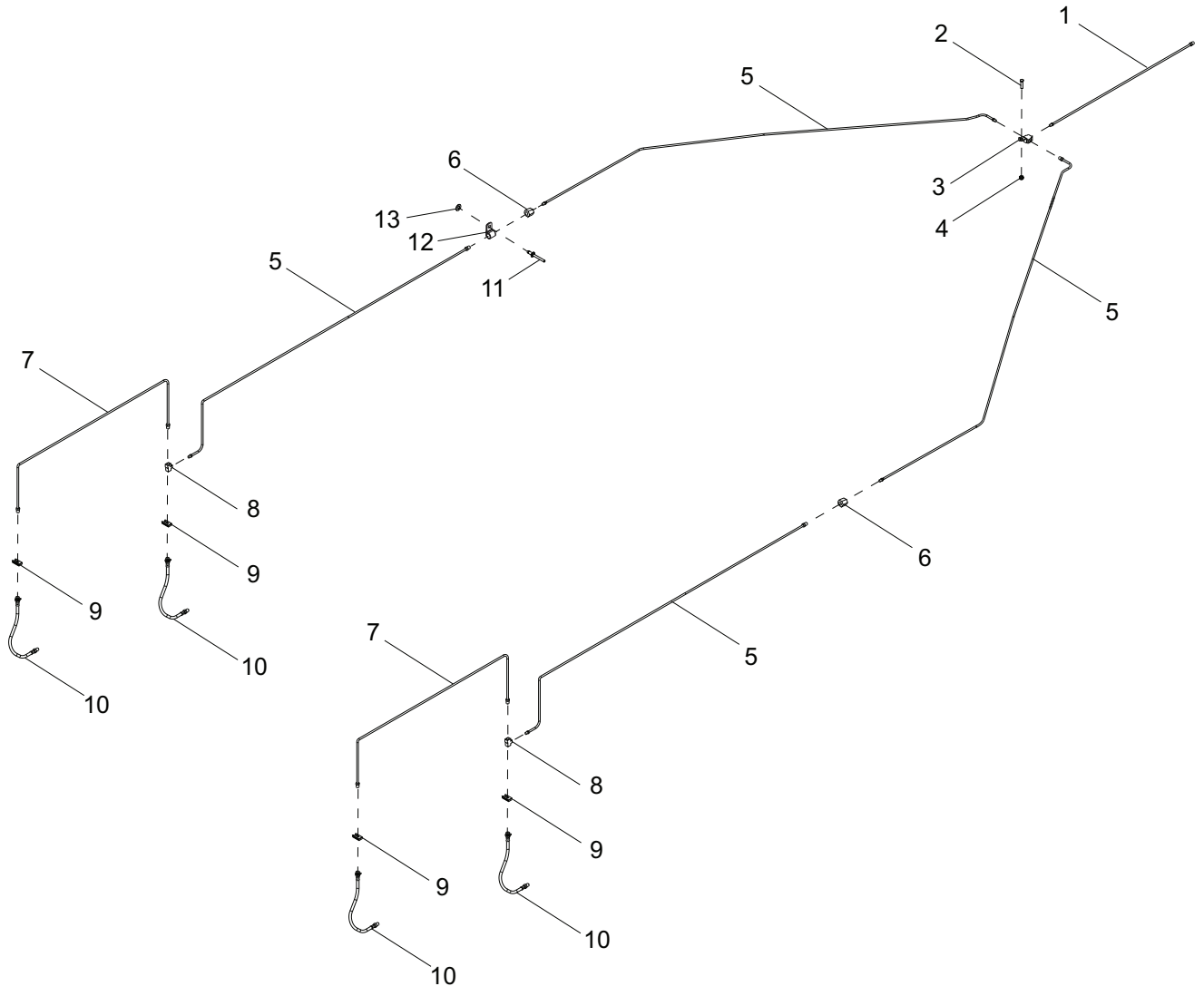

| Item | Part No. | Qty | Description | Notes |
|---|---|---|---|---|
| 1 | 40495 | 1 | Line, brake - .188 x 20.0 | |
| 2 | 60684 | 1 | Screw, .250-20 x .875 standard. hex, SS | |
| 3 | 19252 | 1 | Fitting, strt - .188 brake line T w/bracket - female | |
| 4 | 60144 | 1 | Nut, .250-20 nylock, G5 | |
| 5 | 22338 | 4 | Line, brake - .188 x 60.0 | |
| 6 | 22339 | 2 | Fitting, strt - .188 brake line coupler | |
| 7 | 40493 | 2 | Line, brake - .188 x 40.0 | |
| 8 | 40498 | 2 | Fitting, strt - .188 brake line T - male/female/male | |
| 9 | 40499 | 4 | Clip, brake hose | |
| 10 | 40497 | 4 | Hose, brake - .188 x 20.0 - male/female | |
| 11 | 60231 | 12 | Rivet, .188 dia. x .375 to .500 grip | |
| 12 | 61010 | 12 | Clamp, tubing - .375 heavy-duty | |
| 13 | 60237 | 12 | Washer, #10 flat .495/.036 | |

# RECOMMENDED SPARE PARTS - ENGINE AND SERVICE KITS

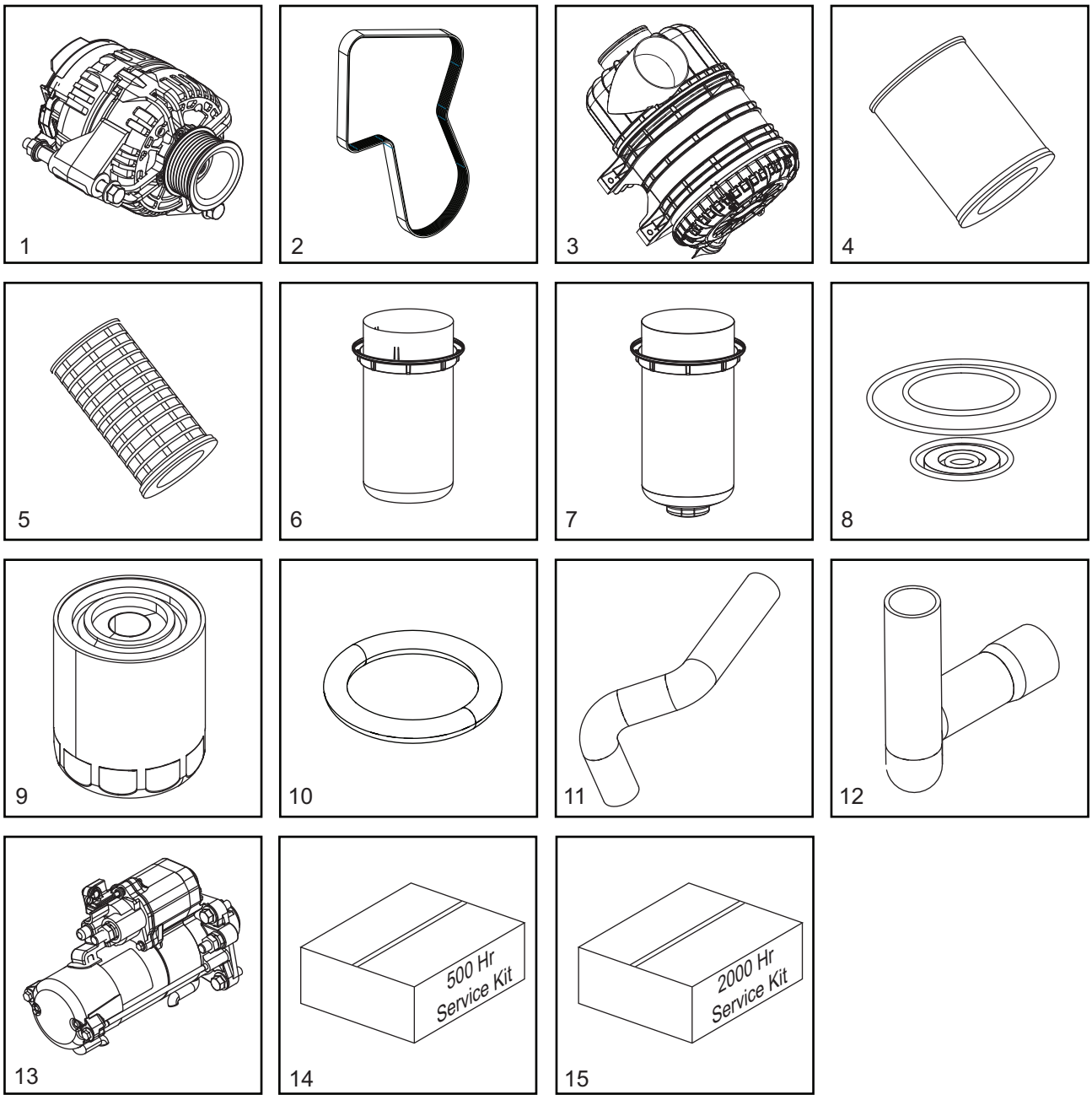


02391

**ENGINE**

1. Alternator ..... 32910
2. Belt, fan ..... 10000012588
3. Filter, air - housing assembly ..... 10000019432
4. Filter, air - primary element ..... 10000024537
5. Filter, air - secondary element ..... 10000024603
6. Filter, fuel - primary ..... 10000018039
7. Filter, fuel - secondary ..... 10000018016
8. Filter, fuel - seal kit ..... 10000018052
9. Filter, oil ..... 32245
10. O-ring, oil filter ..... 10000018100
11. Hose, radiator - lower ..... 53628
12. Hose, radiator - upper ..... 53627
13. Starter ..... 10000012633

**SERVICE KITS**

14. 500 hour kit ..... 10000024539

Includes: Primary Air Filter 10000024537, Secondary Air Filter 10000024603, Primary Fuel Filter Element 10000018039, Secondary Fuel Filter Element 10000018016, Fuel Filter Seal Kit 10000018052 (2), O-ring 10000018100 and Oil Filter 32245

15. 2000 hour kit ..... 10000024632

Includes: Engine Belt 10000012588 (2), OVR Filter 10000016857, Primary Air Filter 10000024537 (4), Secondary Air Filter 10000024603 (4), Primary Fuel Filter Element 10000018039 (4), Secondary Fuel Filter Element 10000018016 (4), Fuel Filter Seal Kit 10000018052 (8), O-ring 10000018100 (4) and Oil Filter 32245 (4)

# RECOMMENDED SPARE PARTS - ELECTRICAL AND TRAILER

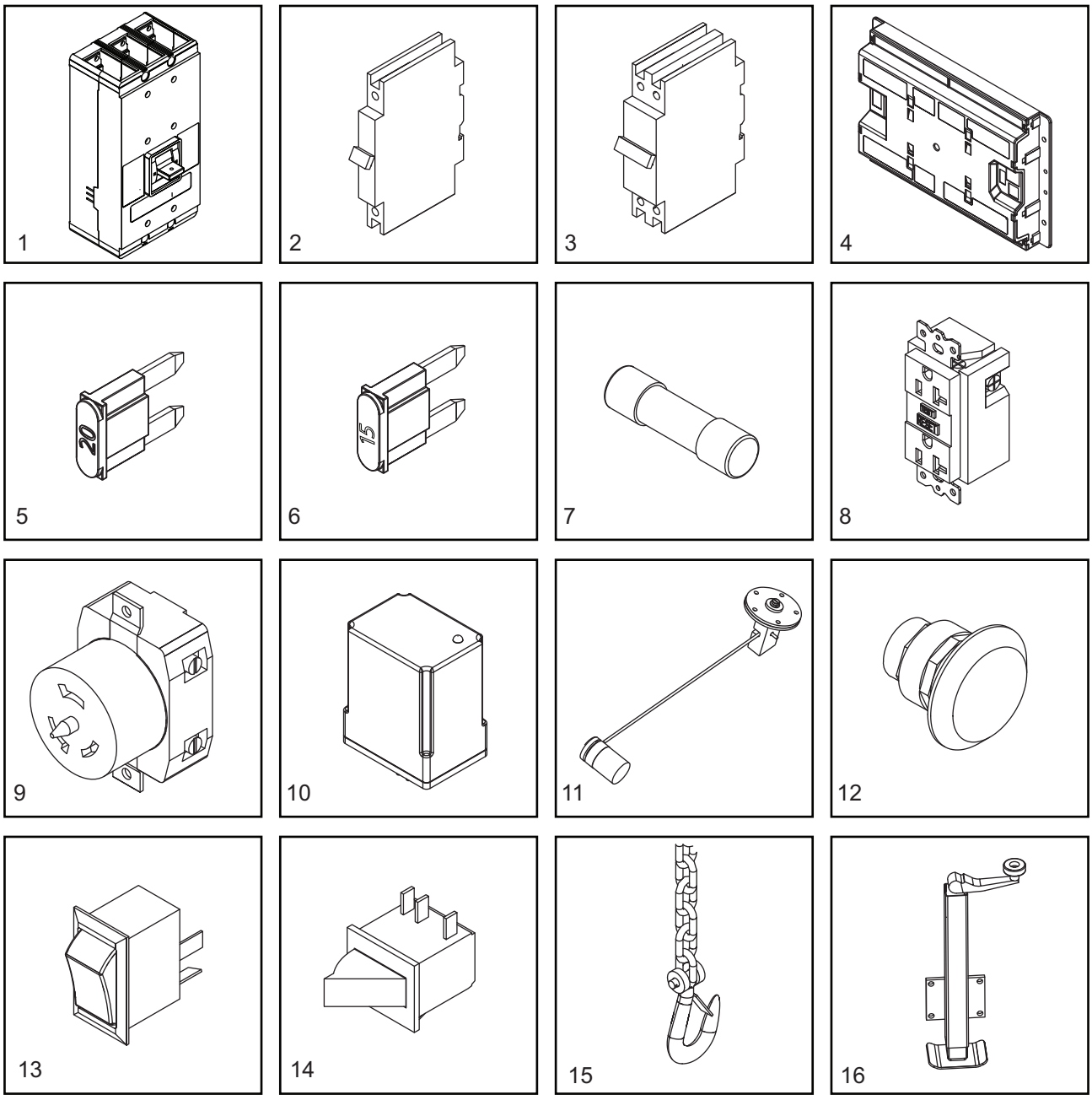


02390

**ELECTRICAL**

| | | |
|---|---|---|
| 1. | Breaker, main | 65354 |
| 2. | Breaker, 20A | 18091 |
| 3. | Breaker 50A | 18092 |
| 4. | Controller, programmed | Call |
| 5. | Fuse, 20 A | 35560 |
| 6. | Fuse, 15A | 68204 |
| 7. | Fuse, 5A | 073590A |
| 8. | Receptacle, 120V/20A GFI | 14130 |
| 9. | Receptacle, 240V/50A twist lock | 18089 |
| 10. | Relay (Optional) | 66340 |
| 11. | Sender, fuel | 21206 |
| 12. | Switch, E-stop assembly | 65470 |
| 13. | Switch, rocker | 66996 |
| 14. | Switch, trigger safety | 12632 |

**TRAILER**

| | | |
|---|---|---|
| 15. | Chain, safety | 20159 |
| 16. | Jack, top wind (tongue) | 27318B |

***Note:*** *To order replacement controller, contact Generac Mobile Products with unit serial number.*

Part No. 10000016959 Rev. B 03/16/2018

©2018 Generac Mobile Products, LLC
All rights reserved.
Specifications are subject to change without notice.
No reproduction allowed in any form without prior written consent from Generac Mobile Products, LLC.

Generac Mobile Products, LLC
215 Power Drive, Berlin, WI 54923
*GeneracMobileProducts.com* | 800-926-9768 | 920-361-4442