GENERAC® | MOBILE

MLT6SMDS

Light Tower Parts Manual

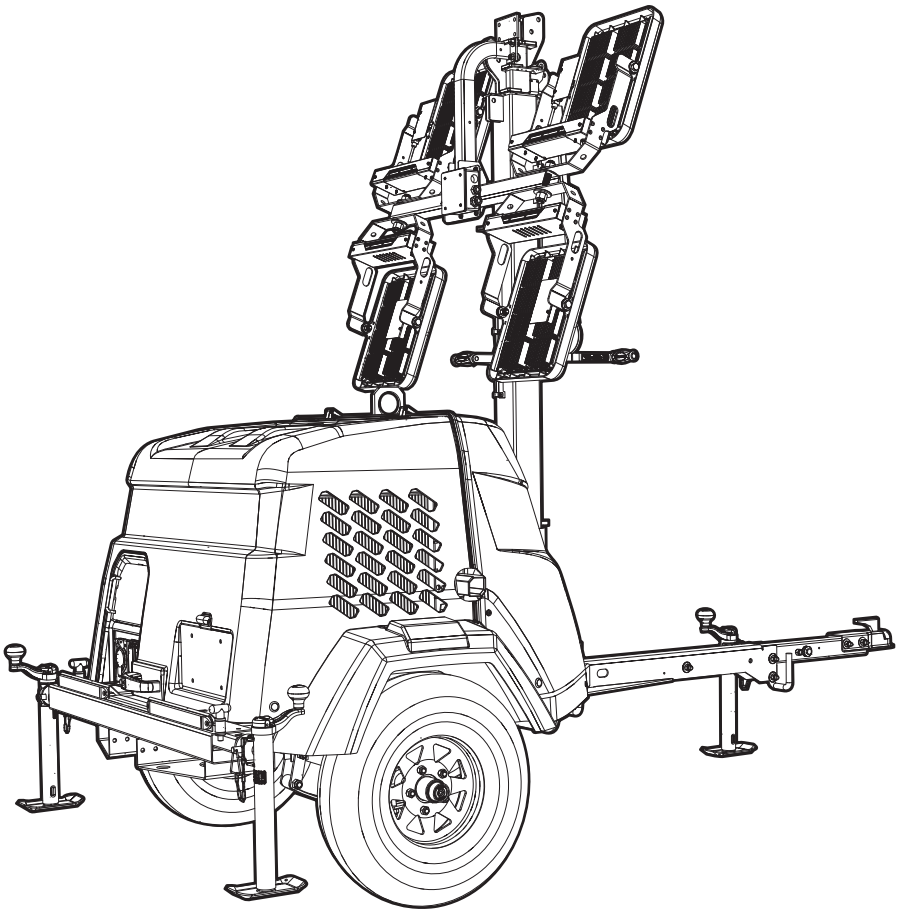

02696

MODEL NUMBER: _____

SERIAL NUMBER: _____

DATE PURCHASED:_____

SAVE THIS MANUAL FOR FUTURE REFERENCE

⚠WARNING

CANCER AND REPRODUCTIVE HARM
www.P65Warnings.ca.gov.

(000393a)

⚠WARNING

Breathing diesel engine exhaust exposes you to chemicals known to the State of California to cause cancer and birth defects or other reproductive harm.

- Always start and operate the engine in a well-ventilated area.
- If in an enclosed area, vent the exhaust to the outside.
- Do not modify or tamper with the exhaust system.
- Do not idle the engine except as necessary.

For more information go to www.P65Warnings.ca.gov/diesel. (000394)

Introduction

This parts manual was prepared based on the information available at the time of publication and is subject to change without notice. Generac Mobile Products reserves the right to change parts at any time. To check whether a revised parts manual is available, contact Generac Mobile Products.

DO NOT MODIFY or use this equipment for any application other than which it was designed for. To keep your equipment fully operational, it is suggested you maintain a stock of commonly used maintenance or service parts. A recommended spare parts list can be found in the back of this manual. To order service parts, please go to **www.generacmobilepoducts.com** or call Generac Mobile Products.

⚠WARNING

Consult Manual. Read and understand manual completely before using product. Failure to completely understand manual and product could result in death or serious injury. (000100a)

⚠WARNING

Environmental Hazard. Always recycle batteries at an official recycling center in accordance with all local laws and regulations. Failure to do so could result in environmental damage, death or serious injury. (000228)

GENERAC MOBILE PRODUCTS LLC

215 Power Drive • Berlin, WI 54923 U.S.A.
Phone: 920-361-4442
FAX: 920-361-4416
Toll Free: 1-800-926-9768
www.generacmobileproducts.com

For technical or parts QUESTIONS, contact Generac Mobile Products Technical Service at 1-800-926-9768.

Engine Make:_____
Engine Serial Number:_____
Engine Model Number: _____

This Page Intentionally Left Blank

Table of Contents

Introduction iii
- Parts Manual Instructions 1
- Unit Decals - Front, Rear and Top 2
- Unit Decals - Left and Right Sides 4
- Unit Decals - Inside Unit 6
- Mast, Junction Box and Lights to Unit 8
- Light Assembly 10
- Mast Junction Box Assembly 12
- Mast Assembly 14
- Mast Assembly - Bottom Post - Manual Winch 16
- Mast Assembly - Bottom Post - Electric Winch 18
- Enclosure Assembly (1 of 2) 20
- Enclosure Assembly (2 of 2) 22
- Control Box Assembly 24
- Control Box Assembly - Powerzone Option (1 of 2) 26
- Control Box Assembly - Powerzone Option (2 of 2) 28
- Cooling System Assembly 30
- Engine Assembly (1 of 2) 32
- Engine Assembly (2 of 2) 34
- Generator Assembly 36
- Components to Trailer Assembly 38
- Trailer Assembly 40
- Recommended Spare Parts - Engine and Service Kits 42
- Recommended Spare Parts - Electrical 44
- Recommended Spare Parts - Misc 46

This Page Intentionally Left Blank

Parts Manual Instructions

Product illustrations are only representations. Products supplied may vary from the illustrations in this parts manual. Parts not shown in the illustration are indicated by a double dash (--) in the item column.

Please be prepared to provide the following information when ordering replacement parts: model number, serial number (on unit serial tag), part number, purchase order number (if applicable), shipping address, shipping method.

Refer to the illustration below to locate the unit ID tag and Vehicle Identification Number (VIN) tag on the unit. Important information, such as the unit serial number, model number, VIN and tire loading information are found on these tags. Record the information from these tags so it is available if the tags are lost or damaged. When ordering parts or requesting assistance, you may be asked to provide this information.

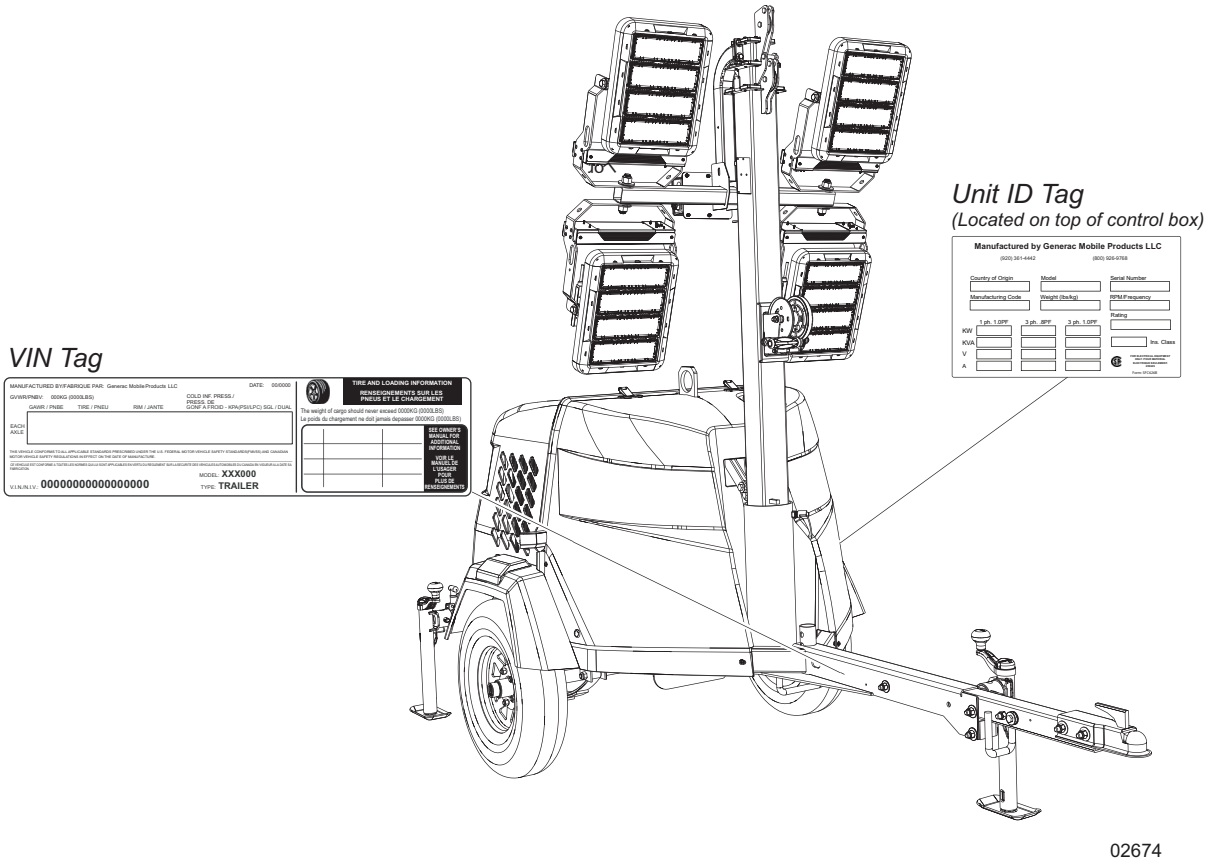

UNIT DECALS - FRONT, REAR AND TOP

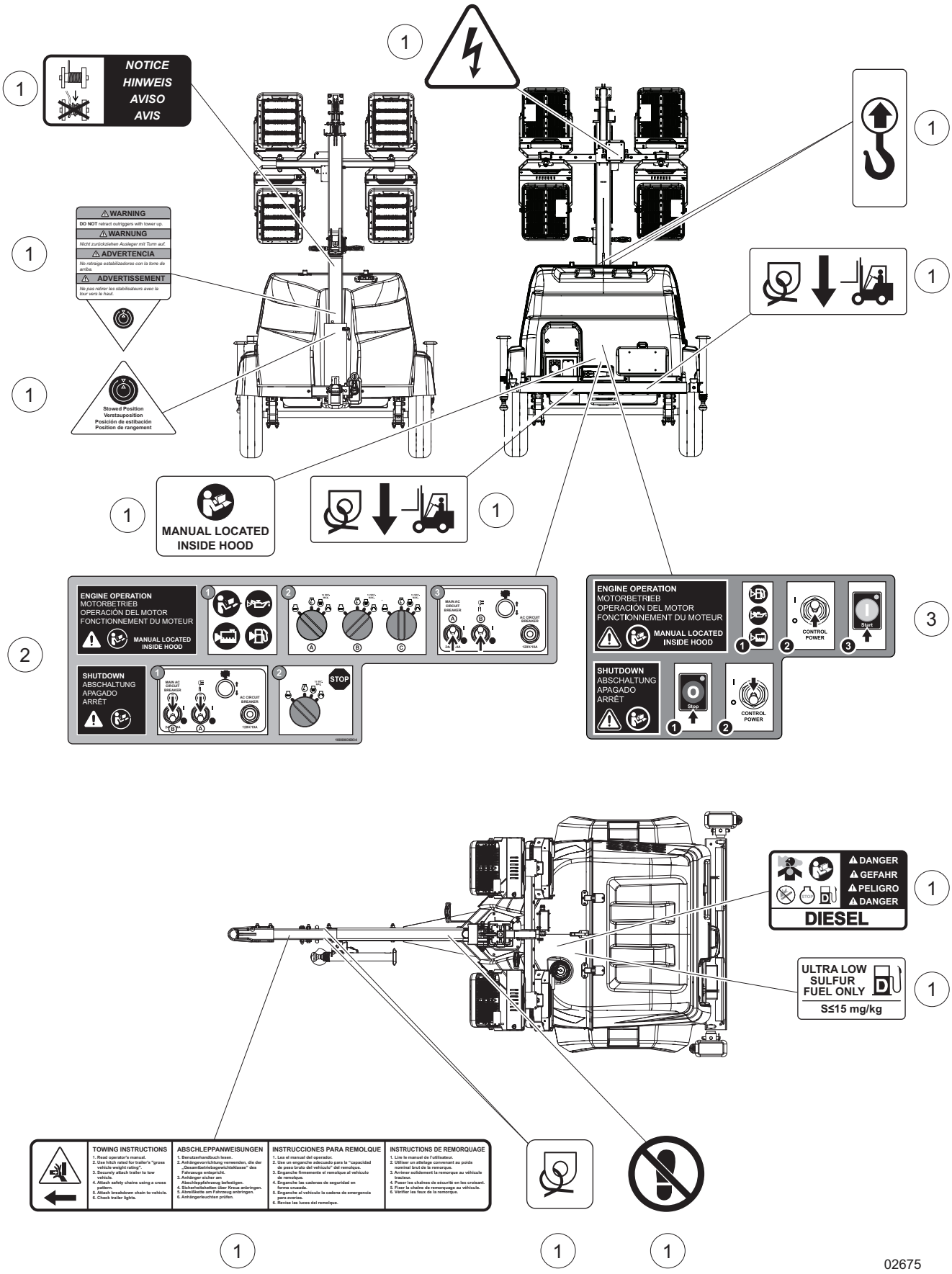

Item	Part No.	Qty	Description	Notes
1	55016	1	Decal, safety MLT6SMD	
2	10000036394	1	Decal, operation - manual	
3	10000039507	1	Decal, operation - PZ	

UNIT DECALS - LEFT AND RIGHT SIDES

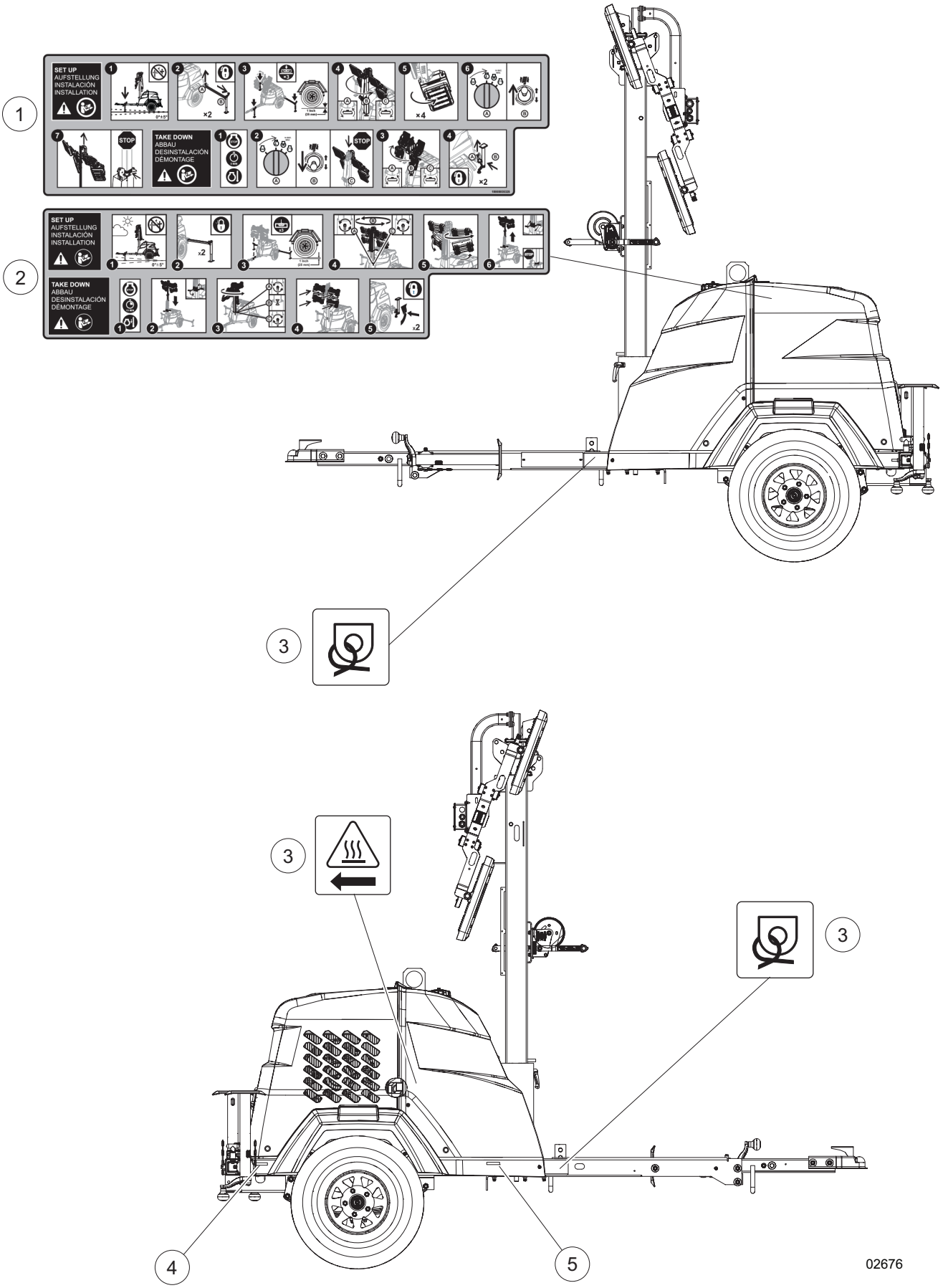

Item	Part No.	Qty	Description	Notes
1	10000035325	1	Decal, operation MLT6SM - SKDS (electric)	
2	10000035402	1	Decal, operation MLT6SM - SKDS (manual)	shown
3	55016	1	Decal, safety MLT6SMD	
4	72149	1	Reflector, red (4.25 in x .75 in)	Set of two
5	72150	1	Reflector, yellow (4.25 in x .75 in)	Set of two

UNIT DECALS - INSIDE UNIT

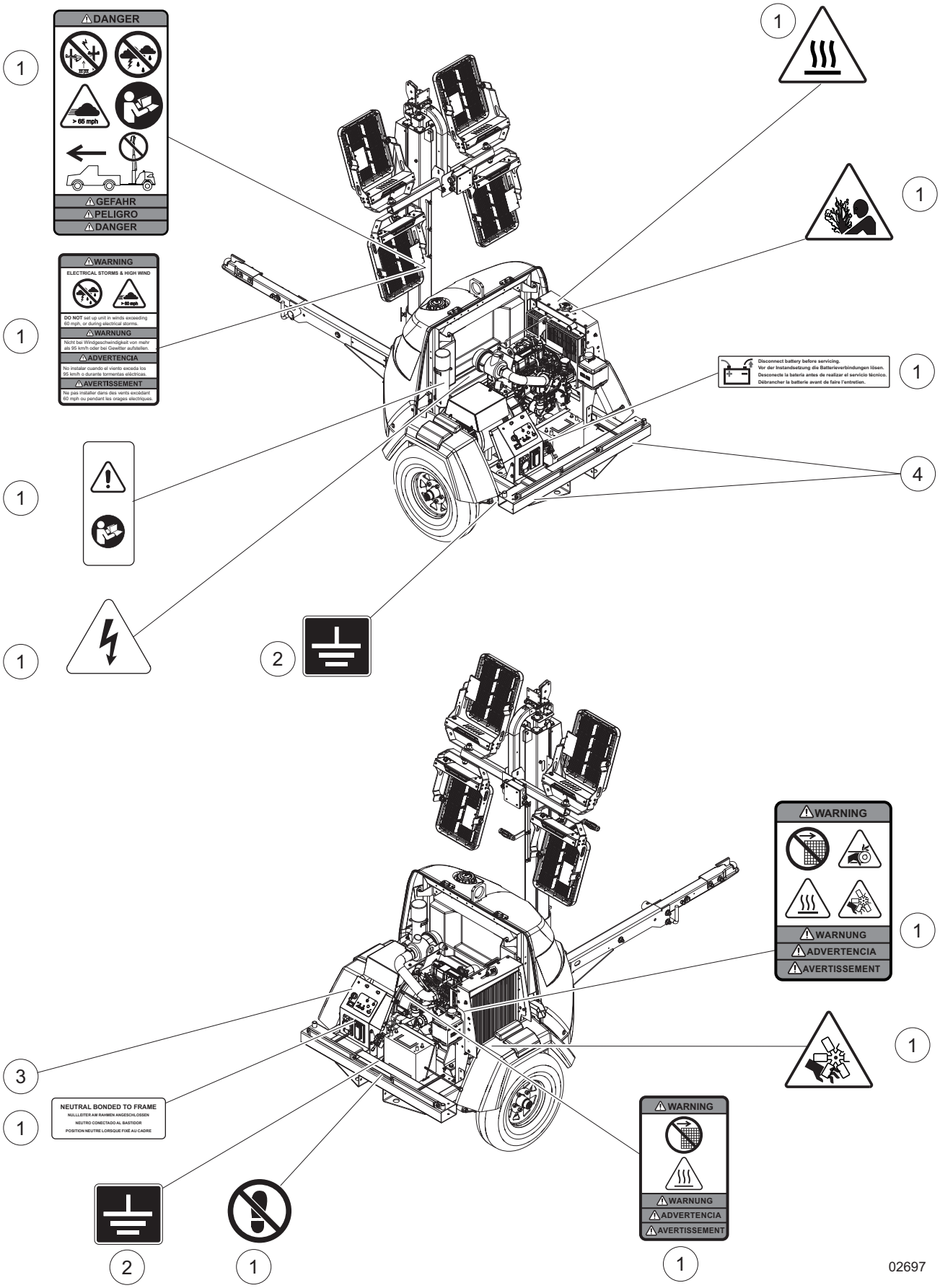

Item	Part No.	Qty	Description	Notes
1	55016	1	Decal, safety MLT6SM - SKDS	
2	12142	1	Decal, ground	
3	17986	1	Decal, control panel MLT 6SK-M	
--	10000039709	1	Decal, control panel - PZ	Powerzone only
4	72132	1	Reflector, rear 2.0 x 2.0 - red	Set of two

MAST, JUNCTION BOX AND LIGHTS TO UNIT

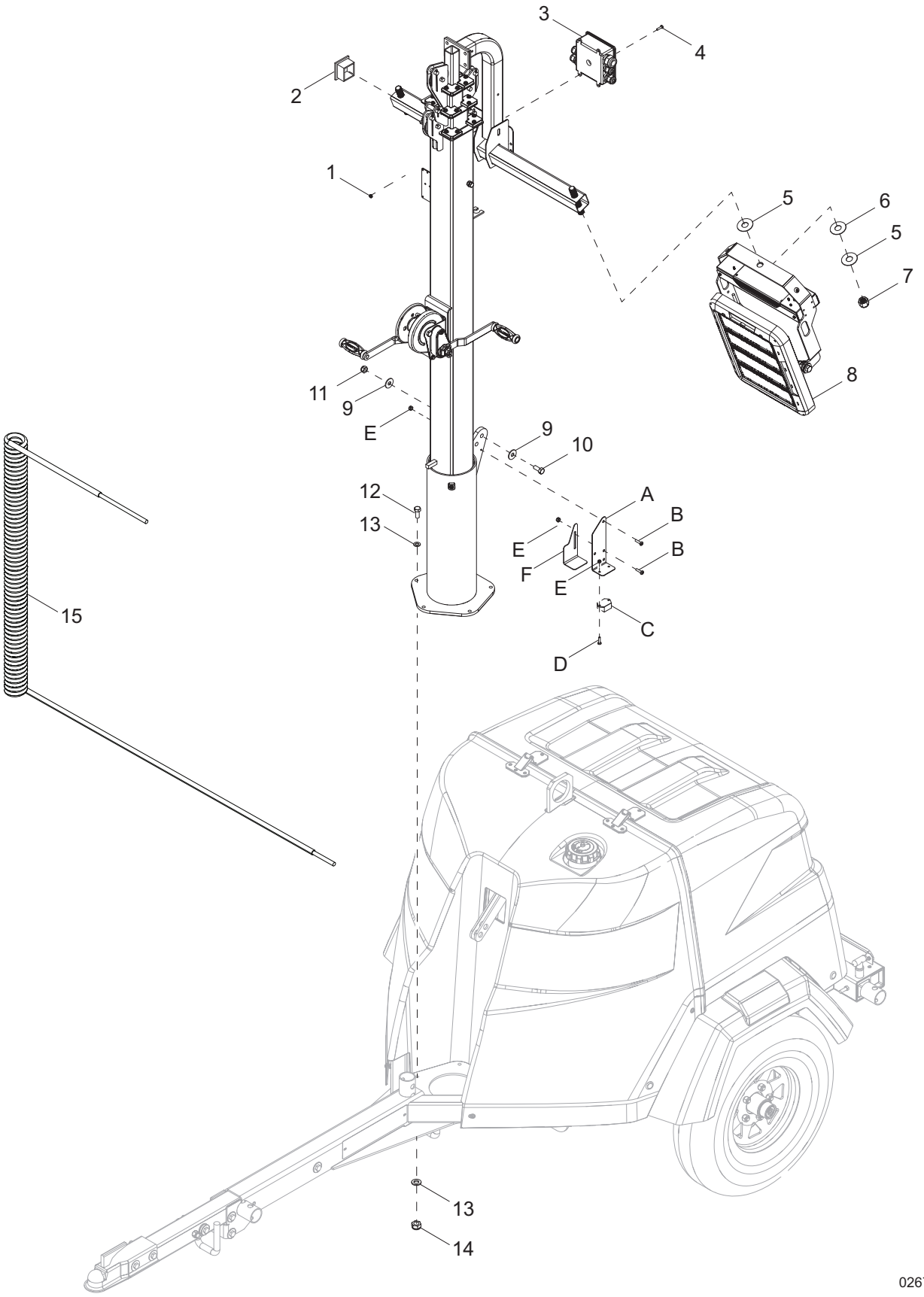

Item	Part No.	Qty	Description	Notes
1	60415	4	Nut, 10-32 nylock, SS	
2	10000023259	2	Plug, 2.0 square x .14 ga wall tube, plastic	
3	10000039557	1	Assembly, mast junction box	
4	60062	4	Screw, 10-32 x .750 pan Phillips, G2	
5	63357	8	Washer, .750 flat 2.0/.062 - plastic	
6	60247	4	Washer. .750 flat 2.020/.130	
7	60308	4	Nut, .750-10 nylock - SS	
8	10000019145	4	Assembly, LED light - 4 module, horizontal	
9	60309	4	Washer, .500 flat 1.060/.090	
10	60484	2	Screw, .500-13 x 2.0 standard hex, G5	
11	60139	5	Screw, .375-16 x 1.50 hex, G5	
12	62221	2	Nut, .500-13 nylock, G5	
13	60386	10	Washer, .375 flat .993/.064	
14	60358	5	Nut, .375-16 nylock, G5	
15	39650	1	Coil cord w/120 inch tail	
Night Watchman: If equipped				
A	70208B	1	Bracket, night watchman	
B	60488	4	Screw, 8-32 x .750 pan Phillips, G2	
C	68763	1	Assembly, night watchman	
D	62054	2	Screw, 8-32 x .500 pan Phillips 18-8, SS	
E	60270	8	Nut, 8-32 nylock	
F	56610B	1	Cover, dusk to dawn sensor	

LIGHT ASSEMBLY

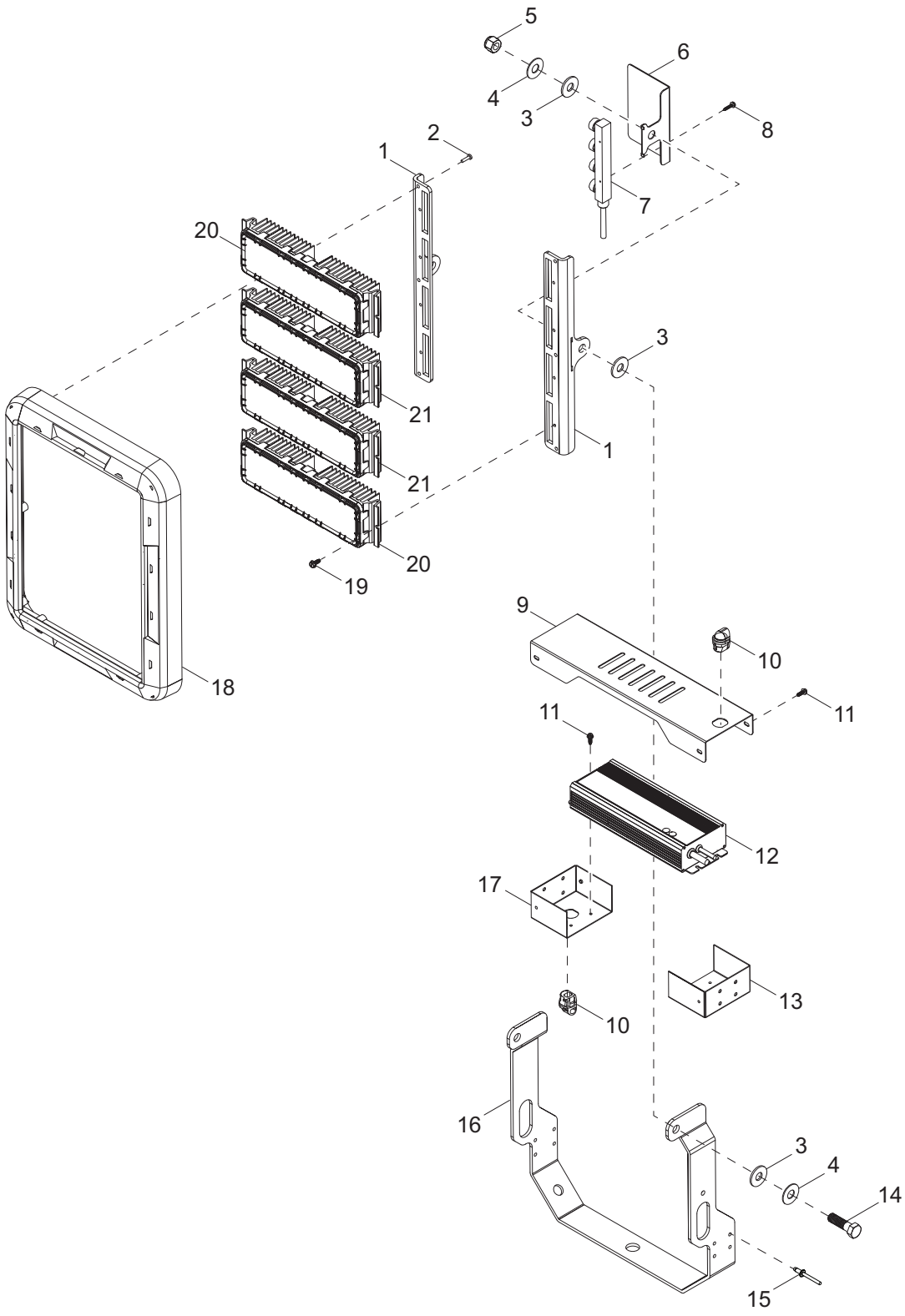

02462

Item	Part No.	Qty	Description	Notes
1	10000019192	2	Frame support, LED module - horizontal	
2	10000019163	6	Screw, 8-16 x .625 PLST pan Phillips - black	
3	72134	6	Washer, .500 nylon 1.25/.100	
4	60700	4	Washer, .500 flat 1.250/.060 - SS	
5	62221	2	Nut, .500-13 nylock, G5	
6	10000019164	1	Bracket, connection block	
7	72120	1	Connector block, LED module	
8	73219	2	Screw, #6-20 x .75 sheet metal - SS	
9	10000019153	1	Enclosure, LED driver	
10	10000019152	2	Bushing, strain relief - right angle	
11	10000023706	4	Screw, 8-32 x .500 hex flanged - black	
12	10000019146	1	Driver, LED 30V 10.7A 321W	
13	10000023684	1	End cap 1, LED driver	
14	60830	2	Screw, .500-10 x 1.750 standard hex - SS	
15	60268	8	Rivet, .188 diameter x .126 to .250 grip	
16	10000023721	1	Trunnion, LED module - horizontal	
17	10000023663	1	End cap 2, LED driver	
18	10000019135	1	End cap, LED module	
19	10000019182	8	Screw, 10-24 x .500 hex flanged	
20	10000019170	2	Module, 60° LED 24-27VDC 60W	
21	10000019160	2	Module, 40° 28 LED 24-27VDC	

MAST JUNCTION BOX ASSEMBLY

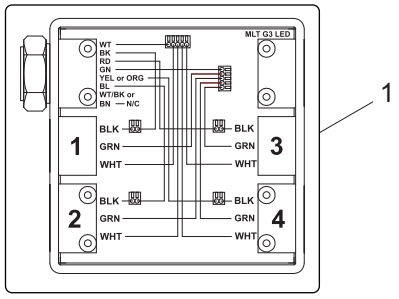

Inside cover

1

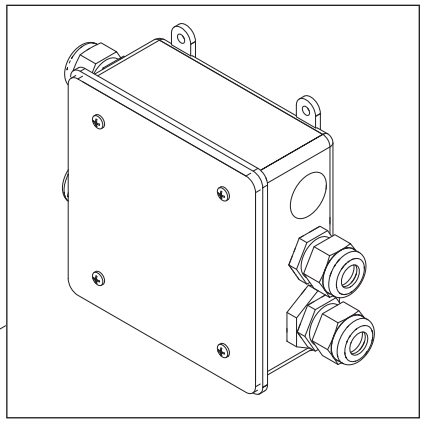

11

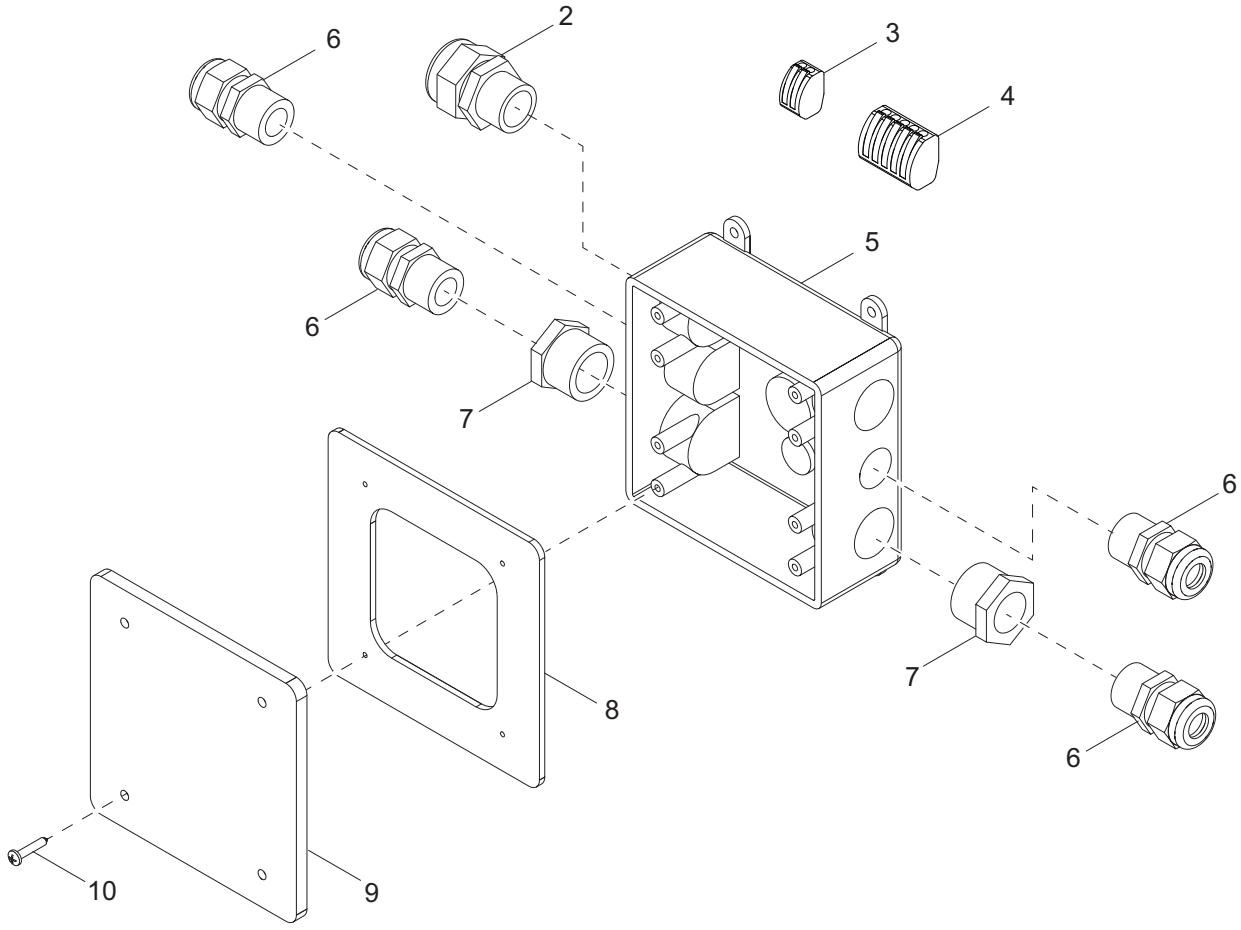

02679

Item	Part No.	Qty	Description	Notes
1	10000034314	1	Decal, mast junction box wiring	
2	14656	1	Strain relief, .750NPT water tight	
3	66100	4	Connector, 2 position.	
4	66102	2	Connector, 5 position.	
5	12094	1	Box, junction	
6	15864	4	Strain relief, .500NPT water tight	
7	60755	2	Fitting, strt .750MNPT x .500FNPT, nylon	
8	13749SRV	1	Gasket, junction box - HFI 281000	
9	12109	1	Cover, box, 2-gang plastic	
10	60424	4	Screw, 6-32 x .750 pan Phillips, G2	
11	10000039557	1	Assembly, mast junction box	

MAST ASSEMBLY

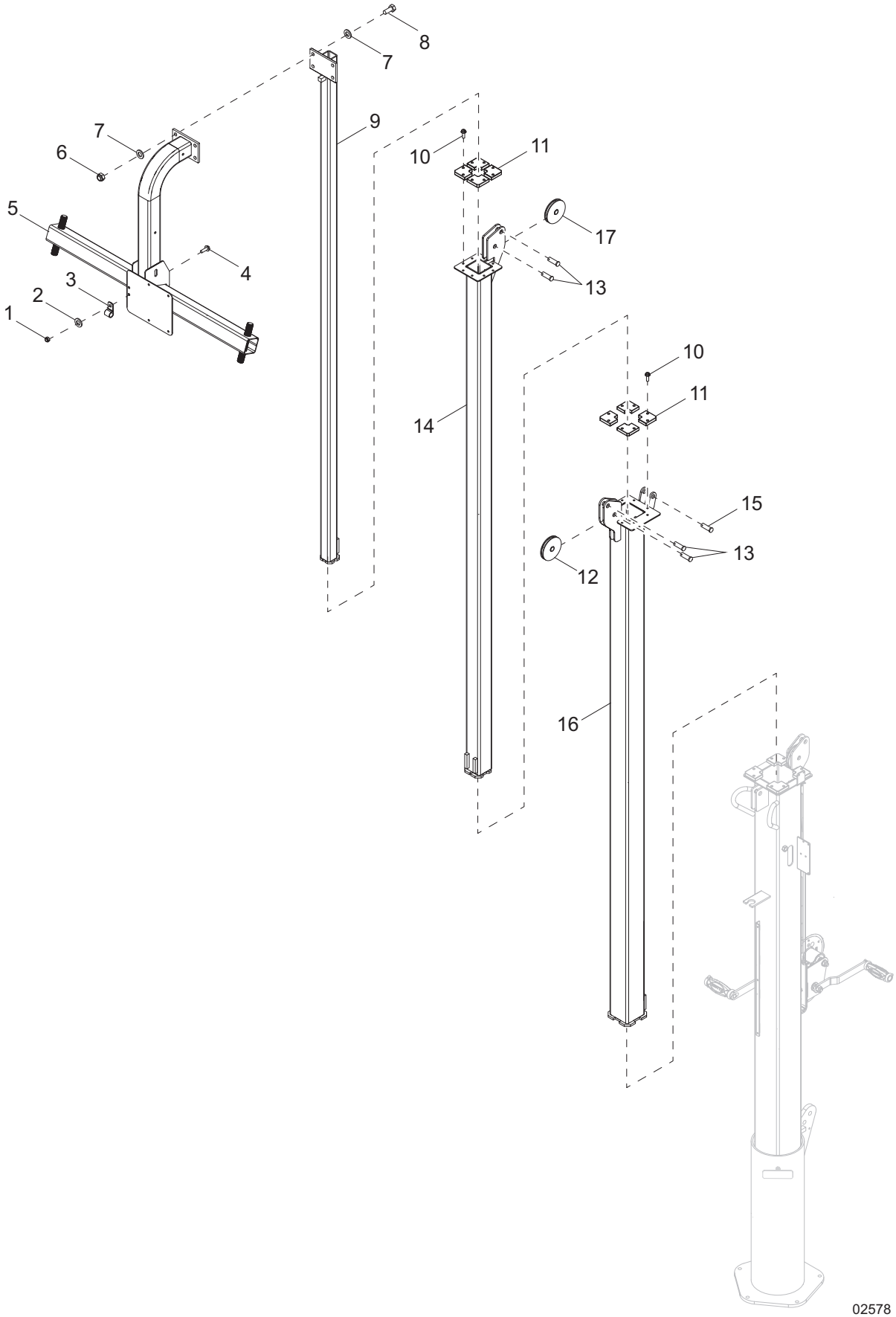

Item	Part No.	Qty	Description	Notes
1	60144	1	Nut, .250-20 nylock, G5	
2	60243	1	Washer, .250 flat .735/.060	
3	16143	1	Clamp, tubing .500	
4	60107	1	Screw, .250-20 x .750 serrated flange hex, G5	
5	43201B	1	Weldment, mast, crossbar	
6	60358	4	Nut, .375-16 nylock, G5	
7	60386	8	Washer, .375 flat .993/.064	
8	60352	4	Screw, .375-16 x 1.250 hex, G5	
9	31264B	1	Weldment, mast - 1.50	
10	63358	16	Screw, .250-20 x .625 hex wash hd	
11	31225	8	Guide	
12	33736	1	Assembly, pulley - vertical mast	
13	63325	4	Pin, clevis .500 diameter x 1.063 UL	
14	31261B	1	Weldment, mast - 2.25	
15	35655	1	Pin, clevis .500 diameter x 1.750 ZP	
16	37465B	1	Weldment, mast - 3.0	
17	14262	1	Sheave, 3.00	
--	31247	1	Cable, .188 x 144 w/ ball swedge	winch cable
--	31248	2	Cable, .188 x 79.75 w/ball swedge	middle cable
--	31277	1	Cable, .188 x 78.0 w/ball swedge	top cable

MAST ASSEMBLY - BOTTOM POST - MANUAL WINCH

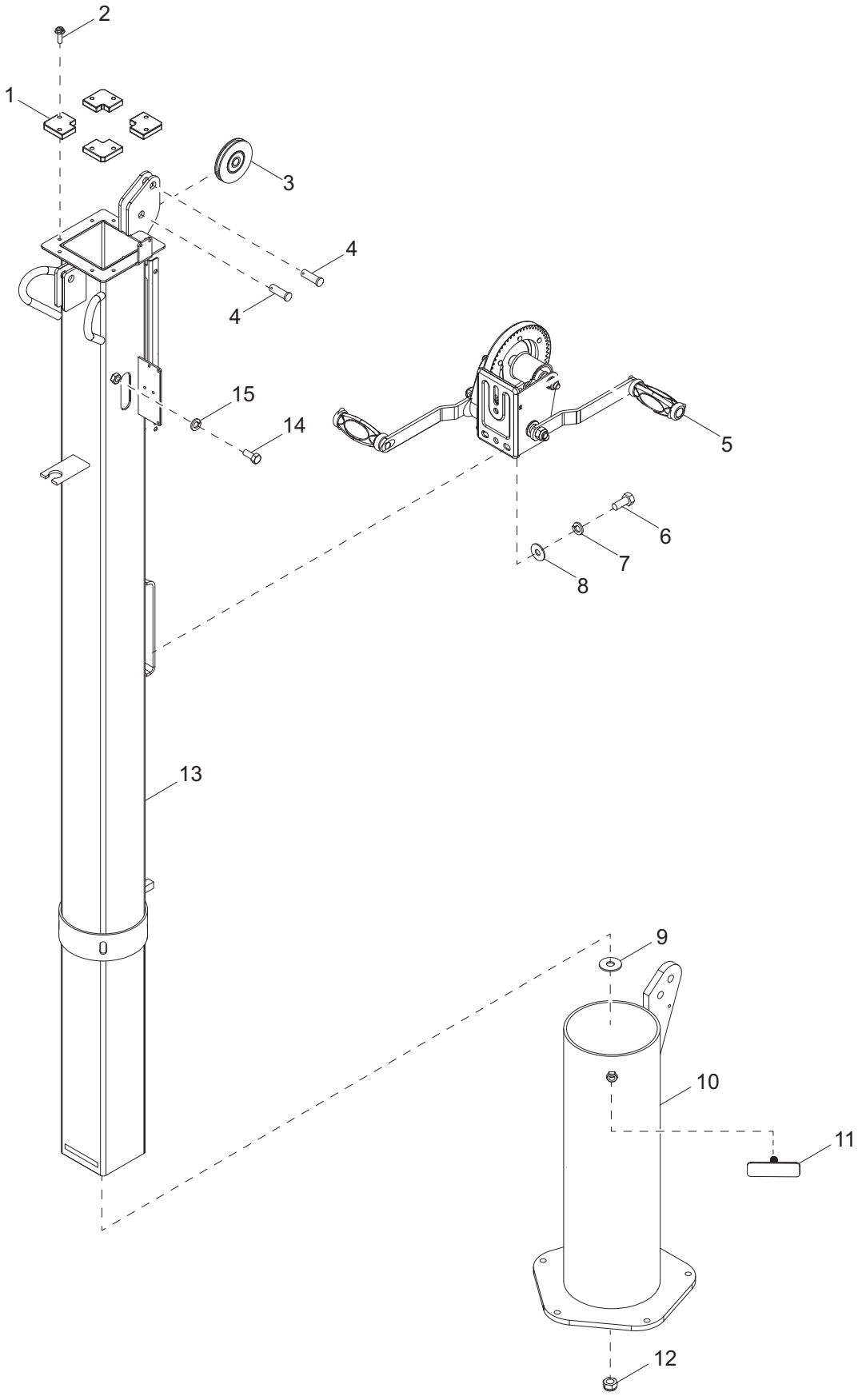

Item	Part No.	Qty	Description	Notes
1	31225	4	Guide	
2	63358	8	Screw, .250-20 x .625 hex washer head	
3	33736	1	Assembly, pulley vertical mast	
4	63325	2	Pin, clevis .500 diameter x 1.063 UL	
5	72127	1	Winch, manual - 1500 lb, dual handle	
6	60205	3	Screw, .375-16 x 1.0 hex, G5	
7	60206	3	Washer, .375 split lock - hardened	
8	60386	3	Washer. .375 flat .993/.064	
9	60247	1	Washer, .750 flat 2.020/.130	
10	31218B	1	Weldment, mast rotation tube	
11	10000018317	1	Weldment, T-handle	
12	60584	1	Nut, .750-10 nylock, G5	
13	37462B	1	Weldment, mast 4.0 in	
14	62269	2	Screw, .375-16 x .75 hex, SS - red	
15	60703	2	Washer, .375 split lock, SS	

MAST ASSEMBLY - BOTTOM POST - ELECTRIC WINCH

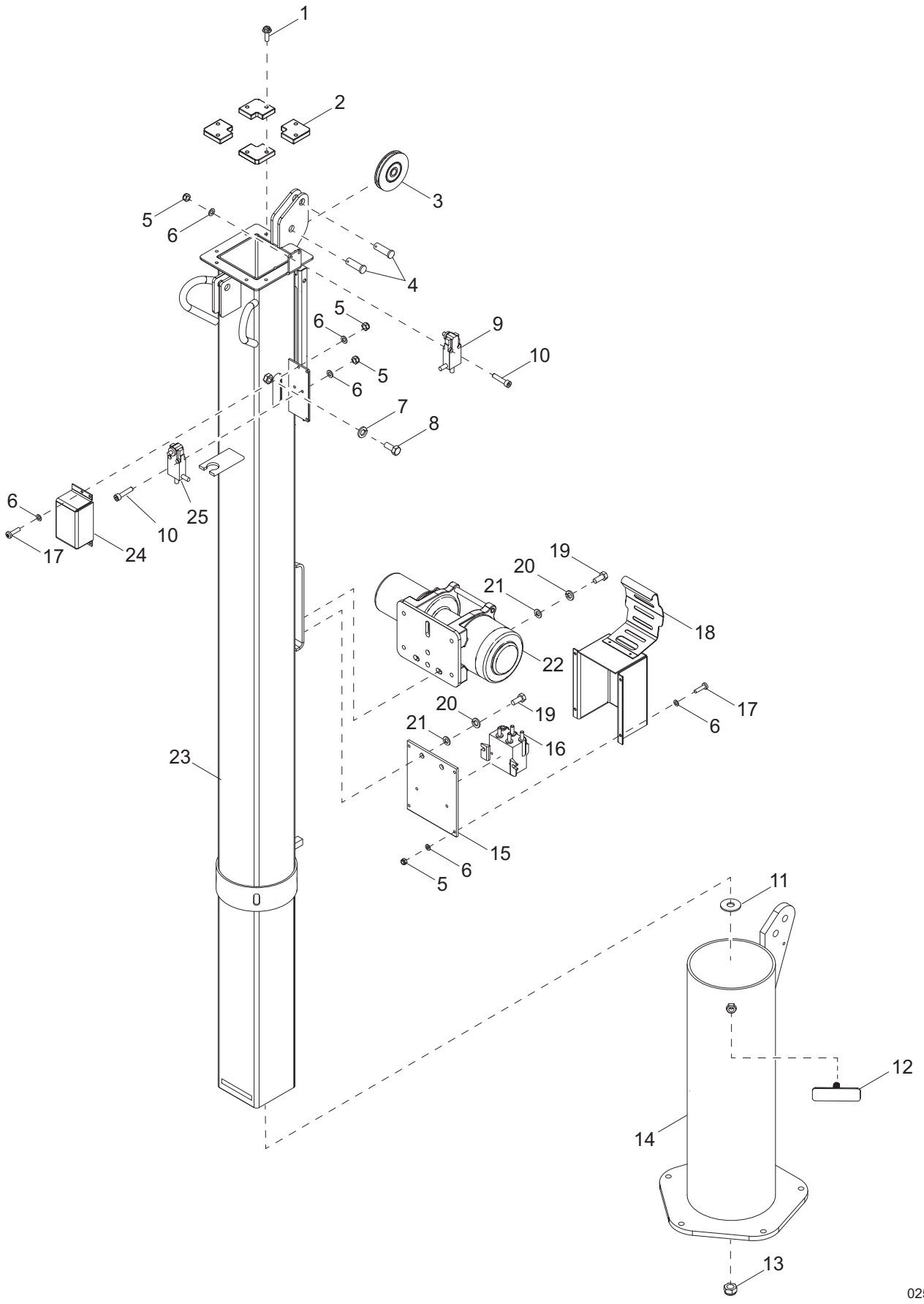

MAST ASSEMBLY - BOTTOM POST - ELECTRIC WINCH

Item	Part No.	Qty	Description	Notes
1	63358	8	Screw, .250-20 x .625 hex washer head	
2	31225	4	Guide	
3	33736	1	Assembly, pulley vertical mast	
4	63325	2	Pin, clevis .500 diameter x 1.063 UL	
5	60207	11	Nut, 8-32 nylock, G6	
6	60269	18	Washer, #8 flat ..433/.036	
7	60703	2	Washer, .375 split lock, SS	
8	62269	2	Screw, .375-16 x .75 hex, SS - red	
9	31740	1	Assembly, down switch	
10	67190	4	Screw, 8-32 x 1.125 socket head, SS	
11	60247	1	Washer, .750 flat 2.020/.130	
12	10000018317	1	Weldment, T-handle	
13	60584	1	Nut, .750-10 nylock, G5	
14	31218B	1	Weldment, mast rotation tube	
15	37207B	1	Plate, contactor	
16	11293	1	Contactor	hardware included
17	60244	7	Screw, 8-32 x .750 pan Phillips, G2	
18	37468B	1	Weldment, winch cover	
19	60205	5	Screw, .375-16 x 1.0 standard hex, G5	
20	60206	5	Washer, .375 split lock	
21	60386	5	Washer, .375 flat .993/.064	
22	12874	1	Winch, electric - 770 lb hoist	
23	37462B	1	Weldment, mast 4.0 in	
24	37205B	1	Cover, up limit switch	
25	31739	1	Assembly, up stop switch	
--	12922	2	Boot, battery cable - red	
--	31742	1	Wire group, electric winch box	
--	31743	1	Harness, winch power cables	

ENCLOSURE ASSEMBLY (1 OF 2)

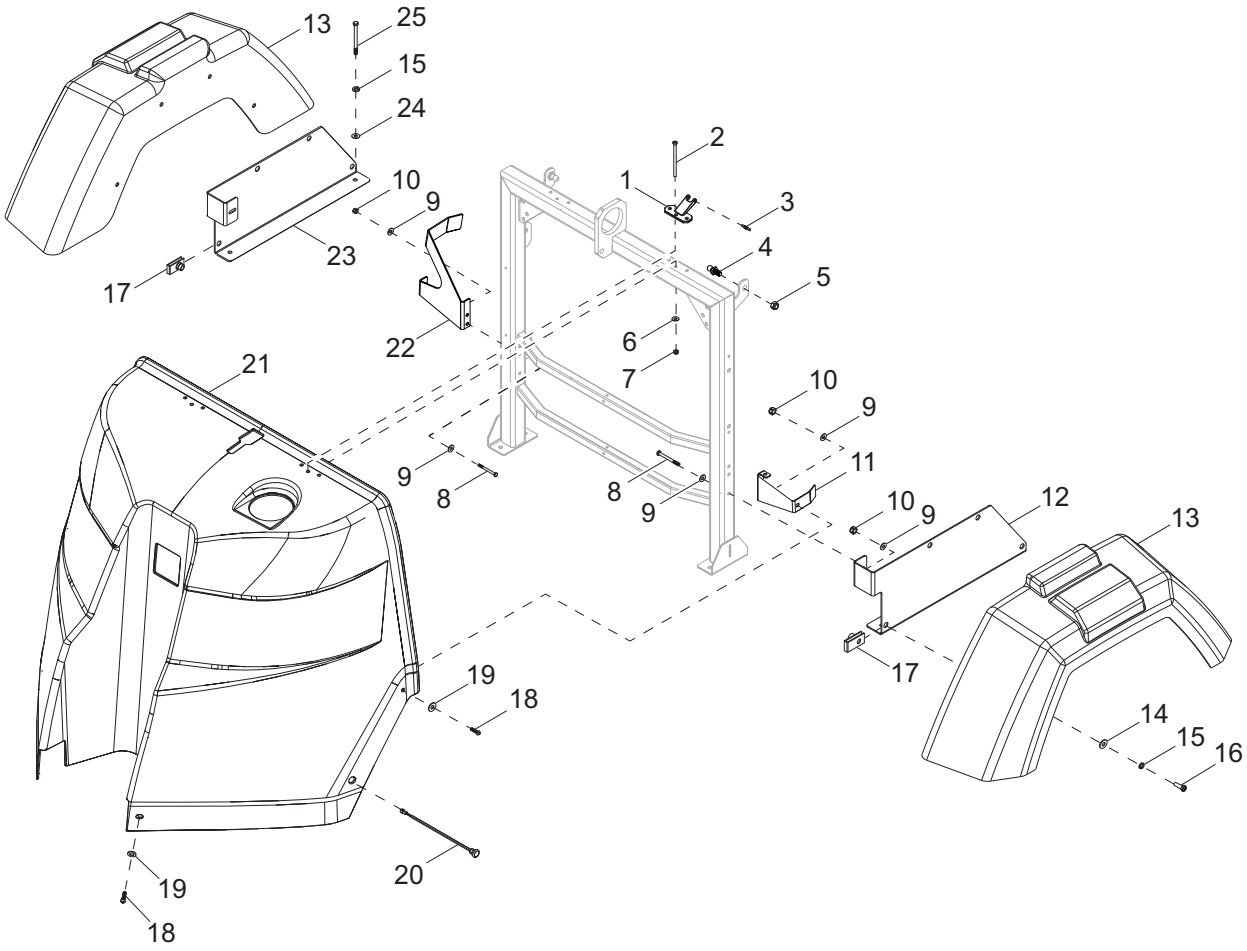

02435

Item	Part No.	Qty	Description	Notes
1	10000022542	2	Hinge, offset housing leaf - front	
2	35282	6	Screw, 10-24 x 3.0 flat head Phillips, SS	
3	10000022543	2	Pin, offset housing hinge - knurled	
4	35293	2	Ball stud, 10mm, .313-18	
5	60303	2	Nut, .312-18 nylock, G2	
6	60237	12	Washer, #10 flat .495/.036	
7	60457	12	Nut, 10-24 nylock, G2	
8	61234	6	Screw, .250-20 x 2.750 standard hex, G5	
9	60243	12	Washer, .250 flat .735/.060	
10	60144	8	Nut, .250-20 nylock, G5	
11	10000017357	1	Guide bracket, enclosure meeting -LH	
12	35141B	1	Bracket, mounting fender - left	
13	10000017287	2	Fender, plastic, 13 in. wheel - textured black	
14	60386	8	Washer, .375 flat .993/.064	
15	60271	8	Washer, .312 split lock	
16	60028	8	Screw, .312-18 x 1.0 standard hex, G5	
17	62086	8	Nut, .312-18 U-clip - short type	
18	68070	4	Screw, .250-20 x 1.00 button hex, SS	
19	60696	6	Washer, .250 flat .625/.050, SS	
20	36961	2	Assembly, amber side marker light	
21	10000012597	1	Enclosure, front cover	
22	10000017378	1	Guide bracket, enclosure meeting -RH	
23	35216B	2	Bracket, mounting fender - right	
24	60119	6	Washer, .312 flat .875/.070	
25	60404	4	Screw, .312-18 x 1.250 standard hex, G5	

ENCLOSURE ASSEMBLY (2 OF 2)

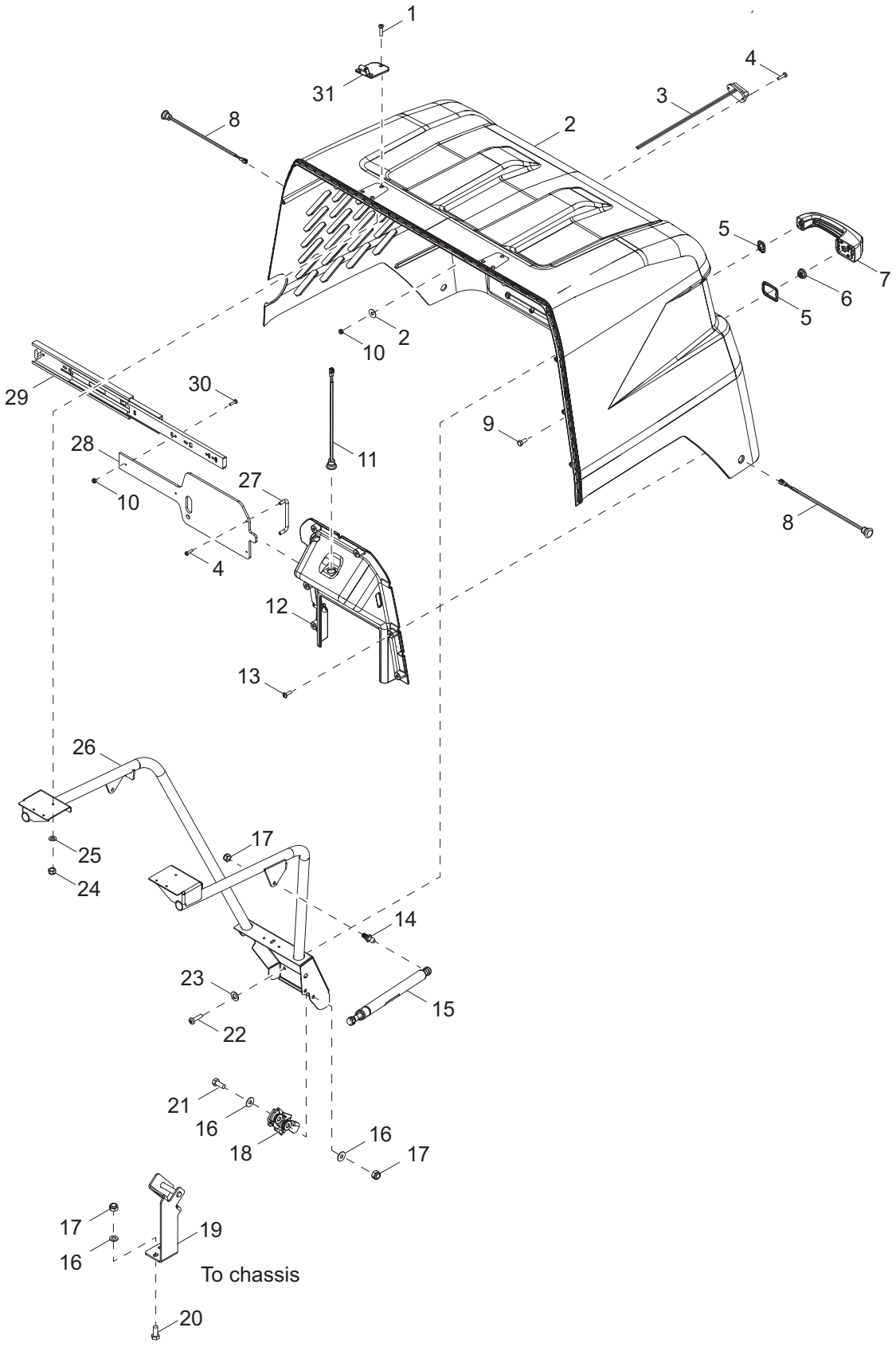

Item	Part No.	Qty	Description	Notes
1	35290	6	Screw, 10-24 x 1.00 flat Phillips, SS	
2	10000012638	1	Housing, rear textured - orange	
3	36963	1	Assembly, license plate light	
4	60694	4	Screw, 8-32 x .750 pan Phillips, SS	
5	70216	1	Gasket, kit handle, push button	
6	60036	1	Nut, M6-1.00 serrated flange, G8.8	
7	35138	1	Handle, push-button padlock	
8	36962	2	Assembly, red side marker	
9	60335	1	Screw, M6-1.00 x 25 standard hex, SS	
10	60270	4	Nut, 8-32 nylock, class 6	
11	36964	1	Assembly, controls light	
12	10000012596	1	Bezel, control panel textured - black	
13	10000017348	6	Screw, D60-2.14 x 20TRWH	
14	35293	2	Ball stud, 10mm, .313-18	
15	35137	2	Gas shock, 120 lb	
16	60119	6	Washer, .312 flat .875/.070	
17	60303	6	Nut, .312-18 nylock, G2	
18	35139	1	Latch, rotary	
19	37178B	1	Mount, door latch striker	
20	61066	2	Screw, .312-18 x 1.00 carriage square - SS	
21	62001	2	Screw, .312-18 x 1.250 standard hex, G5	
22	60146	3	Screw,	
23	60243	3	Washer, .250 flat .735/.060	
24	60457	6	Nut, 10-24 nylock, G2 ZC	
25	60237	2	Washer, #10 flat .495/.036 ZC	
26	37012B	1	Weldment, enclosure structure	
27	37123	1	Handle, control box cover	
28	10000017623	1	Cover, sliding control panel	
29	36914	1	Slide, control box cover	
30	62054	2	Screw, 8-32 x .500 pan Phillips - SS	
31	10000022523	2	Hinge, leaf offset housing - rear	
--	10000028590	1	Assembly, rear enclosure	Items 1-31
--	60335	1	Screw, M6-1.00 x 25 standard hex, SS	
--	60375	1	Clamp, tubing - .312 lt duty	

CONTROL BOX ASSEMBLY

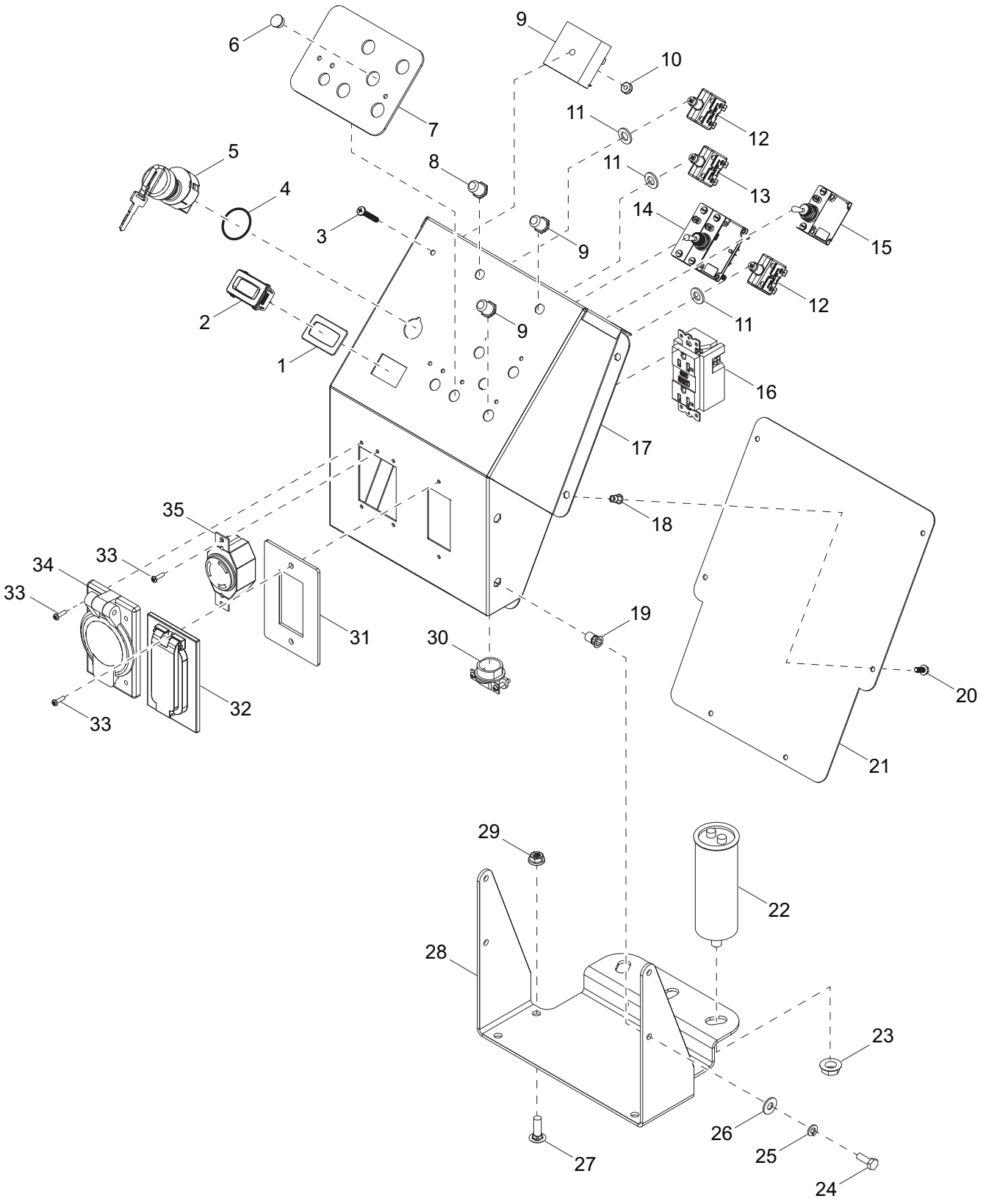

Item	Part No.	Qty	Description	Notes
1	36944	1	Gasket, hour meter	
2	36886	1	Meter, hour	
3	63308	1	Screw, 10-32 x 1.250 pan Phillips, SS	
4	37042	1	O-ring, .75IDx15-16 in. x 3/32 in	
5	36882	1	Switch, sealed key, 4-position	
6	65798	1	Plug, hole .468 x .06	Manual mast only
7	10000034973	1	Decal, control panel	
8	36938	3	Boot, push button breaker	
9	14201	1	Relay, 10A SPDT, time delay - 15 sec fixed	
10	60061	1	Nut, 10-32 nylock	
11	60386	3	Washer, .375 flat .993/.064	
12	36937	2	Breaker, 10A DC	
13	36935	1	Breaker, 15A, 1 pole, 250V	
14	36975	1	Breaker, 30A main	
15	36880	1	Switch, 10 amp	
16	14130	1	Receptacle, 120V/20A GFI	
17	36884B	1	Control box	
18	62234	6	Insert, threaded #10-32 hex .020-.130 grip	
19	63231	4	Insert, threaded .250-20 hex .027-.165 grip	
20	62254	6	Screw, 10-32 x .500 serrated flange, SS	
21	36885B	1	Cover, control panel box	
22	36980	1	Capacitor, 25μF, 5% 440VAC, sealed stud mount	
23	60148	1	Nut, M12-1.75 serrated flange, G8.8	
24	60281	4	Screw, .250-20 x .750 standard hex, G5	
25	60286	4	Washer, .250 split lock	
26	60243	4	Washer, .250 flat .735/.060	
27	61066	4	Screw, .312-18 x 1.0 carriage, SS	
28	38409	1	Bracket, control box mounting	
29	60095	4	Nut, .312-18 serrated flange	
30	14219	1	Strain relief - .75 Romex w/nut	
31	10000027575	1	Gasket, receptacle cover	
32	36939	1	Cover, receptacle - weather proof 20/30A twist-lock	
33	62210	6	Screw, 6-32 x .50 pan Phillips, SS	
34	37017	1	Cover receptacle - weather proof, 20A GFCI single	
35	14137	1	Receptacle, 240V/30A twist	
--	60728	6	Nut, 6-32 nylock, G5	use with 62210
--	65707	1	Switch, toggle - SPDT spring	Electric mast only
--	68282	1	Wire group, control box - electric mast	
--	68283	1	Harness, generator to control box	
--	68284	1	Harness, control box to electric mast	

CONTROL BOX ASSEMBLY - POWERZONE OPTION (1 OF 2)

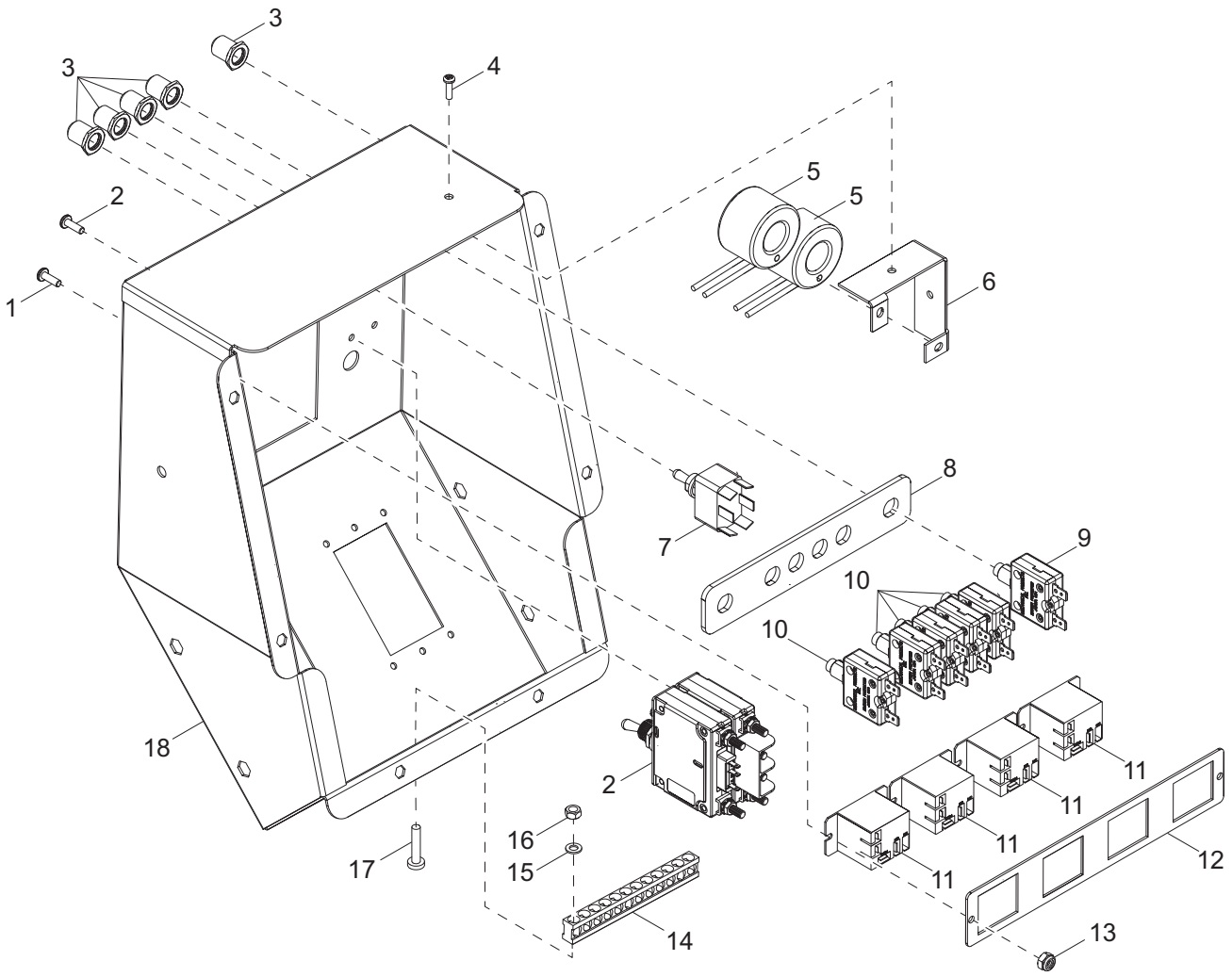

02345

CONTROL BOX ASSEMBLY - POWERZONE OPTION (1 OF 2)

Item	Part No.	Qty	Description	Notes
1	62054	3	Screw, 8-32 x .500 pan Phillips,- SS	
2	36975	2	Breaker, 30A main	with hardware
3	36938	6	Boot, push button breaker	
4	62210	6	Screw, 6-32 x .50 pan Phillips - SS	
5	66255	2	Transformer, current	
6	38449B	1	Bracket, CT mount	
7	68508	1	Switch, toggle - SPST (on-off) 12A 125V	
8	38448B	1	Spacer, breaker control box	
9	36937	1	Breaker, 10A DC	
10	36935	5	Breaker, 15A, 250V, 1 pole	
11	29759	4	Relay, 12V coil 120-240 VAC rated	
12	38447B	1	Bracket, relay	
13	60270	3	Nut, 8-32 nylock, G6	
14	14204	1	Kit, ground bar	
15	60252	6	Washer, #10 split lock	
16	60318	2	Nut, 8-32 Hex, G5	
17	60406	2	Screw, 8-32 x 1.00 pan Phillips, G2	
18	37823B	1	Box, control - PZ	

CONTROL BOX ASSEMBLY - POWERZONE OPTION (2 OF 2)

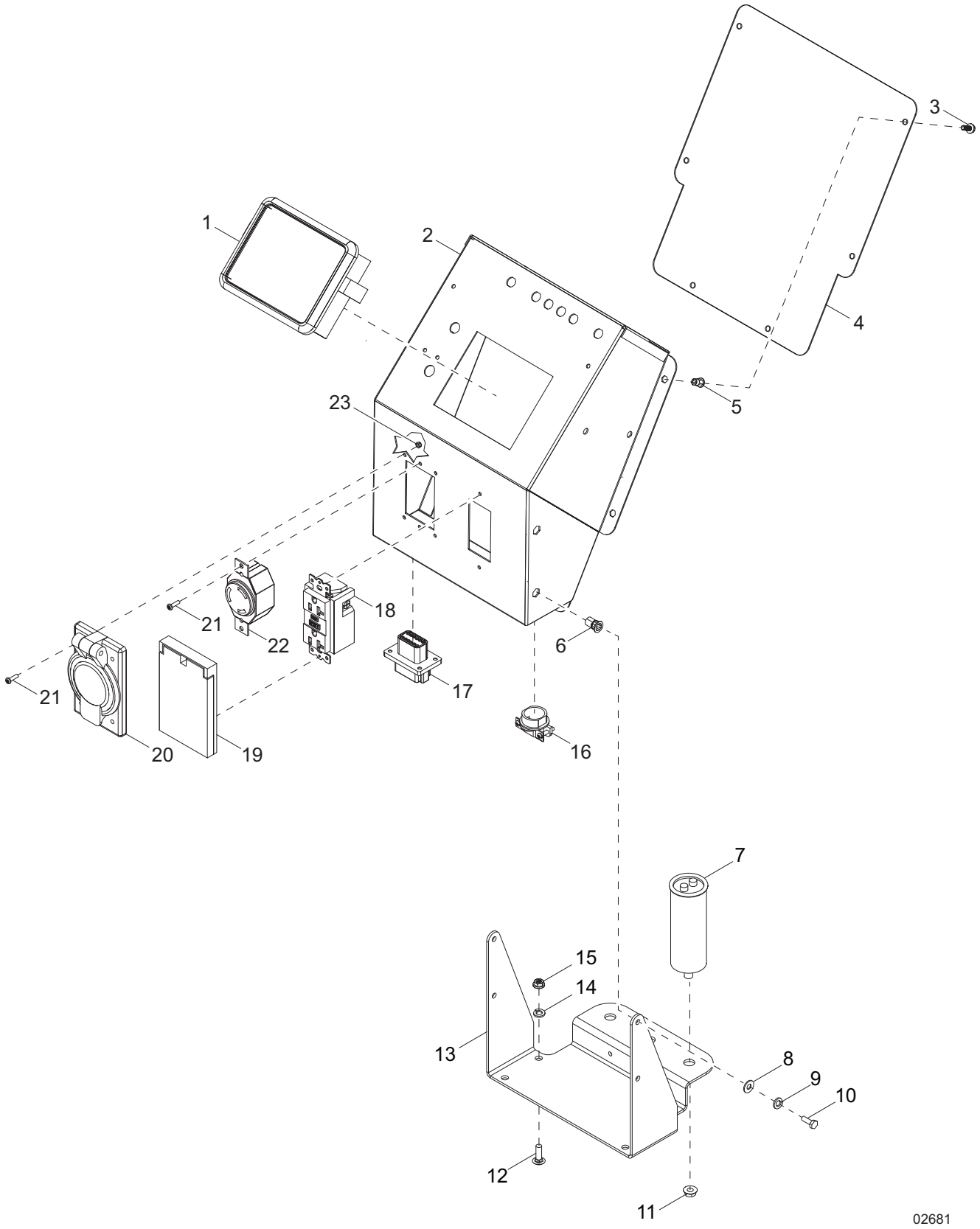

CONTROL BOX ASSEMBLY - POWERZONE OPTION (2 OF 2)

Item	Part No.	Qty	Description	Notes
1	70137	1	Controller, Deep Sea - programmed	
2	37823B	1	Box, PZ control panel	
3	60277	6	Screw, 10-32 x .500 pan Phillips, G2	
4	38413B	1	Cover, control panel box	
5	62234	6	Insert, 10-32 hex, .020-.130 grip, threaded	
6	63231	4	Insert, .250-20 hex, .027-.165 grip, threaded	
7	36980	1	Capacitor, 25μF 5% 440VAC, sealed stud mount	
8	60243	4	Washer, .250 flat .735/.060	
9	60286	4	Washer, .250 split lock	
10	60647	4	Screw, .250-20 x .500 hex, G5	
11	60148	3	Nut, M12-1.75 serrated flange, G8.8	
12	61066	4	Screw, .312-18 x 1.0 carriage - SS	
13	38409B	1	Bracket, control box mounting	
14	60119	4	Washer, .312 flat .875/.070	
15	60095	4	Nut, .312-18 serrated flange - case hardened	
16	14219	2	Strain relief, .75 Romex w/nut	
17	66695	1	Connector, Duetsch 12 position - flange DT	
18	14130	1	Receptacle, 120V/20A GFI	
19	37017	1	Cover, receptacle 20A GFCI single - weatherproof	
20	36939	1	Cover, receptacle 20/30A - weatherproof	
21	62210	6	Screw, 8-32 x .500 pan Phillips - SS	
22	14137	1	Receptacle, 250V/ 30A twist	
23	60728	6	Nut, 6-32 nylock, G5	
--	68534	1	Harness, control box PZ	replaces p/n 68284
--	68535	1	Harness, gen to control box PZ	replaces p/n 68283
--	69654	1	Harness, engine PZ	replaces p/n 37034

COOLING SYSTEM ASSEMBLY

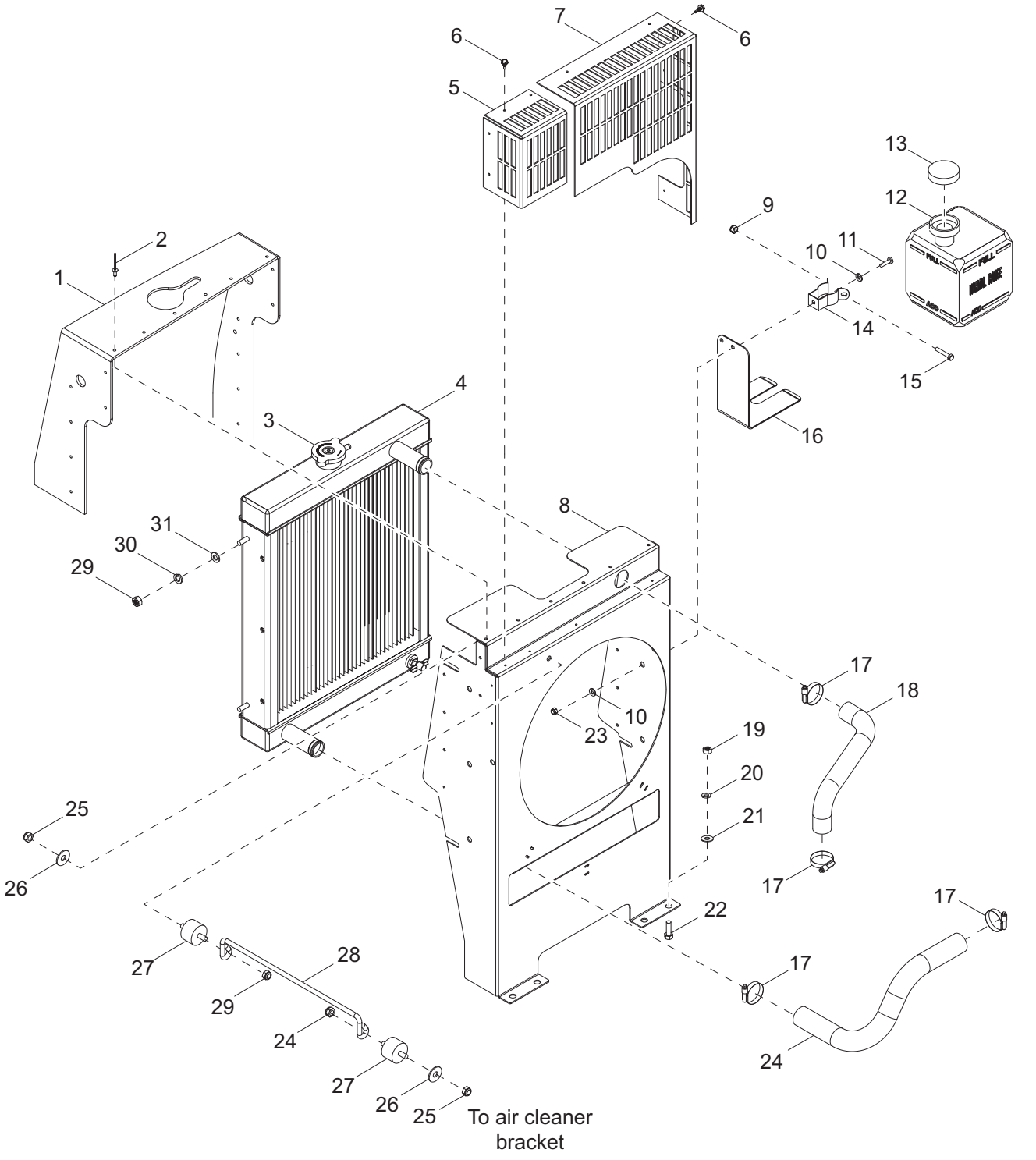

02699

Item	Part No.	Qty	Description	Notes
1	36979	1	Seal, rubber, cooling	
2	60195	18	Rivet, .188 dia. x .375 to .500 grip, large flange	
3	19219	1	Cap, radiator pressure small - 14.7 psi	
4	10000020162	1	Radiator	
5	36227B	1	Guard, fan, left	
6	60364	9	Screw, 10-16x5.0 std hex, G2	
7	72161B	1	Guard, fan, right	
8	36226B	1	Fan shroud	
9	60144	1	Nut, .250-20 nylock, G5	
10	60067	4	Washer, #10 flat .435/.060, SS	
11	61180	2	Screw, 10-32 x .750 pan Phillips, SS	
12	20287	1	Jug, overflow 2 qt. (.5 gal)	
13	19714	1	Cap, overflow jug	
14	19726	1	Clamp, overflow bottle	
15	60414	1	Screw, .250-20 x 1.50 standard hex, G5	
16	22419B	1	Bracket, support overflow jug .5 gallon	
17	15422	4	Clamp, hose - SAE 020 (.75-1.75)	
18	32383SRV	1	Hose, radiator - upper	
19	60285	14	Nut .312-18 hex, G2	
20	60271	21	Washer, .312 split lock	
21	60119	24	Washer .312 flat .875/.070	
22	61066	4	Screw, .312-18 x 1.00 carriage square 18-8 SS	
23	60061	1	Nut, 10-32 nylock	
24	16688SRV	1	Hose, radiator - lower	
25	62079	4	Nut, .312-18 nylock jam	
26	60119	2	Washer, .312 flat .875/.070	
27	34052	2	Isolator, rubber 1.50 x 1.0, 5/16-18 studs	
28	36989	1	Rod, radiator stay	
29	60032	4	Nut, M8-1.25 hex, G8.8	
30	60029	2	Washer, M8 split lock	
31	60166	2	Washer, M8 flat	

ENGINE ASSEMBLY (1 OF 2)

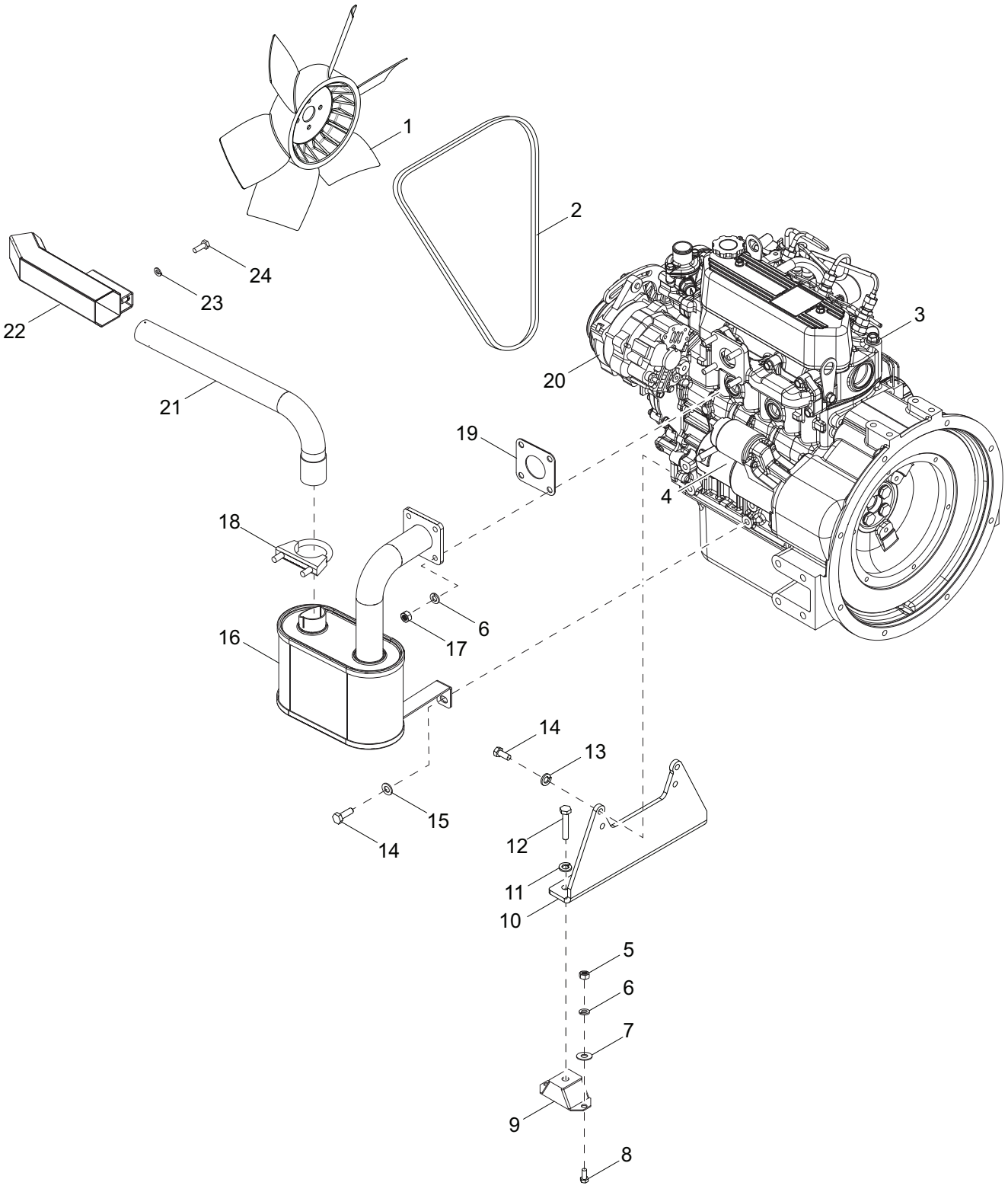

Item	Part No.	Qty	Description	Notes
1	16742	1	Fan, engine	
2	16692	1	V-belt, alternator	
3	72154	1	Engine, L3E T4	
4	70232	1	Starter	
5	60285	4	Nut .312-18 hex, G2	
6	60271	8	Washer, .312 split lock	
7	60119	4	Washer .312 flat .875/.070	
8	61066	4	Screw, .312-18 x 1.00 carriage, SS	
9	34052	2	Isolator, rubber - 1.50 x 1.00, 5/16-18 studs	
10	37030B	1	Bracket, engine mount	
11	60702	2	Washer, .500 split lock, SS	
12	60275	2	Screw, .500-13 x 1.00 standard hex, G5	
13	60026	4	Washer, M10 split lock	
14	60422	5	Screw, M10-1.25 x 25 standard hex, G8.8	
15	60027	1	Washer, M10 flat	
16	76191	1	Muffler, side exhaust	
17	60032	4	Nut, M8-1.25 hex, G8	
18	25455	1	Clamp, muffler 1.50	
19	11042SRV	1	Gasket, muffler	
20	16743	1	Alternator	
21	69951BH	1	Tube, exhaust	
22	76924B	1	Shield, exhaust	
23	60286	2	Washer, .250 split lock	
24	60281	2	Screw, .250-20 x .750 standard hex, G5	
--	65684	1	Harness, lead - Mitsubishi	
--	37034	1	Harness, engine	
--	11691	1	Bracket, lower radiator hose guard - Mitsubishi	
--	11147	1	Oil cap	

Note: *Engine and generator parts used in all Generac Mobile Products, LLC equipment carry the Original Equipment Manufacturer (OEM) warranty unless otherwise stated. OEM warranty parts must be purchased through an OEM dealer. Please contact Generac Mobile Products, LLC with questions.*

ENGINE ASSEMBLY (2 OF 2)

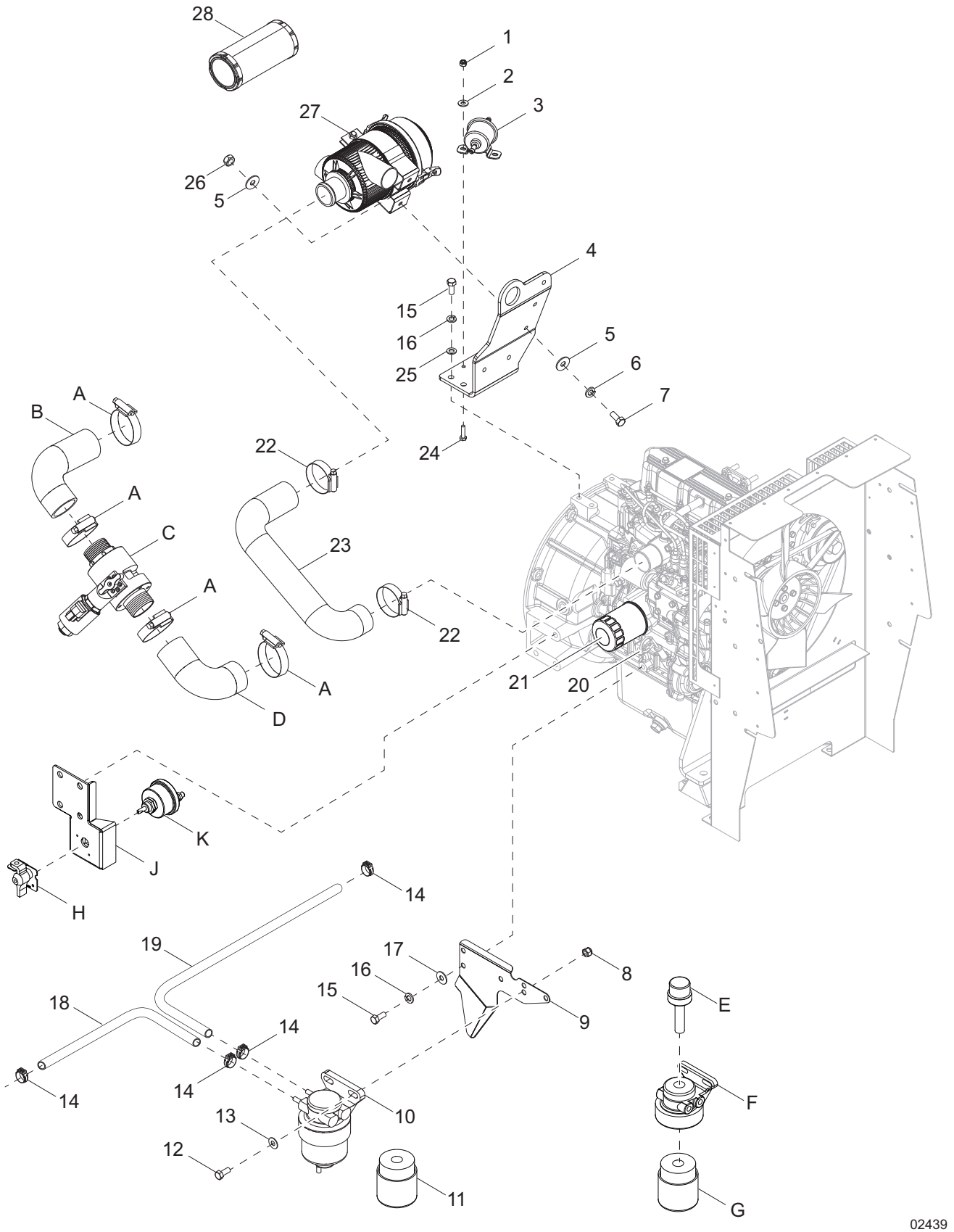

Item	Part No.	Qty	Description	Notes
1	60144	2	Nut, .250-20 nylock, G5	
2	60243	4	Washer, .250 flat .735/.060	
3	13278SRV	1	Fuel pump, electric	
4	17977B	1	Bracket, air cleaner	
5	60119	26	Washer, .312 flat .875/.07	
6	60271	20	Washer, .312 split lock	
7	60694	4	Screw, 8-32 x .750 pan Phillips, SS	
8	60358	2	Nut, .375-16 nylock, G5	
9	72060B	1	Plate, oil deflector	
10	17641	1	Fuel filter head and element	incl. 17647
11	17647	1	Element, fuel filter	
12	60352	2	Screw, .375-16 x 1.250 standard hex, G5	
13	60119	2	Washer, .312 flat .875/.070	
14	60777	4	Clamp, hose - .312 fuel hose crimp style	
15	60422	7	Screw, M10-1.25 x 25 standard hex, G8.8	
16	60026	7	Washer, M10 split lock	
17	60386	3	Washer, .375 flat .993/.064	
18	50018	1.5 ft	Hose, fuel - .312 ID, 50 psi SAE 30R7	
19	50018	2.8 ft	Hose, fuel - .312 ID, 50 psi SAE 30R7	
20	11148	1	Dipstick, oil	
21	10000014392	1	Filter, oil 750 hr.	750 hr interval
22	60316	2	Clamp, hose - SAE 032 (1.56-2.50)	
23	16589	1	Hose, air cleaner	
24	60393	2	Screw, .250-20 x 1.00 standard hex, G5	
25	60027	4	Washer, M10 flat	
26	60285	2	Nut, .312-18 hex, G2	
27	10000021718	1	Filter, air with bracket	incl. 10000035428
28	10000035428	1	Element, air filter	
Positive Air Shutdown: If equipped				
A	60316	4	Clamp, hose - SAE 032 (1.56-2.50)	
B	70100	1	Hose, intake to PAS	
C	72137	1	Valve, PAS 1.75 ESD 12V heater	
D	70101	1	Hose, engine to PAS	
--	52003	1	Box, 12V PAS control box	
Heated Fuel Filter: If equipped				
E	13876	1	Heater, fuel filter	
F	17641	1	Filter, fuel - head	
G	17647	1	Filter, fuel - element	
Battery Disconnect: If equipped				
H	65499	1	Switch lockout lever kit	
J	10000008538	1	Bracket, battery disconnect	
K	65498	1	Switch, disconnect	

Note: *Engine and generator parts used in all Generac Mobile Products, LLC equipment carry the Original Equipment Manufacturer (OEM) warranty unless otherwise stated. OEM warranty parts must be purchased through an OEM dealer. Please contact Generac Mobile Products, LLC with questions.*

GENERATOR ASSEMBLY

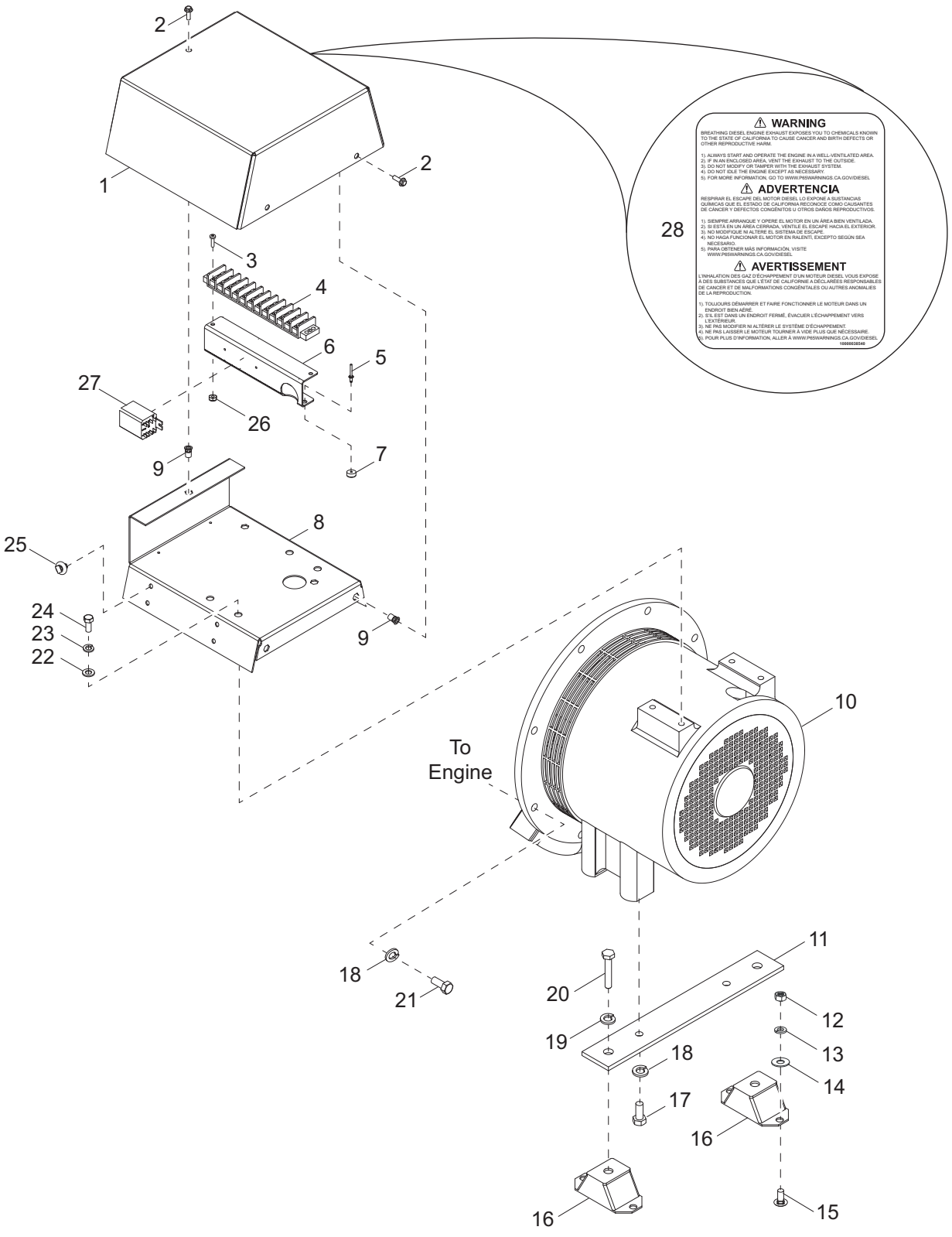

02683

Item	Part No.	Qty	Description	Notes
1	17994B	1	Cover, generator, Marathon	
2	60175	4	Screw, .250-20x.500 serrated flange hex, G5	
3	60062	2	Screw, 10-32 x .750 pan Phillips, G2	
4	14139	1	Block terminal - 12 position	
5	60267	2	Rivet, .125 diameter x .191 to .270 grip	
6	10000034474	1	Bracket, terminal strip	
7	15215	2	Rubber bumper	
8	54254B	1	Plate, electric junction	
9	63231	9	Insert, threaded .250-20 hex .027-.165 grip	
10	10000020581	1	Generator, Marathon, 6kW, 60Hz, cap	
11	15045B	1	Bracket, generator mounting	with 16556
12	60285	4	Nut, .312-18 hex, G2	
13	60271	4	Washer, .312 split lock	
14	60119	4	Washer, .312 flat .875/.070	
15	61066	4	Screw, .312-18 x 1.00 carriage, SS	
16	15241	2	Isolator, rubber - 80-200 lb	
17	60352	2	Screw, .375-16 x 1.250 standard hex, G5	
18	60206	10	Washer, .375 split lock	
19	60702	2	Washer, .500 split lock, SS	
20	60275	2	Screw, .500-13 x 1.00 standard hex, G5	
21	60352	8	Screw, .375-16x1.250 standard hex, G5	
22	60243	4	Washer, .250 flat .735/.060	
23	60271	4	Washer, .312 split lock	
24	61082	4	Screw, M8-1.25 x 20 serrated flange hex	
25	66685	8	Mount cable tie, .25-.28 diameter,.031-.276 grip	
26	60061	2	Nut, 10-32 nylock	
27	G061554	1	Relay	
28	10000038540	1	Decal, CA-Prop 65	
--	60168	6	Screw, .312-18 x .750 standard hex, G5	For flex plate mount
--	60166	18	Washer, M8 flat DIN 125 hardened	3 each w/60168

Note: *Engine and generator parts used in all Generac Mobile Products, LLC equipment carry the Original Equipment Manufacturer (OEM) warranty unless otherwise stated. OEM warranty parts must be purchased through an OEM dealer. Please contact Generac Mobile Products, LLC with questions.*

COMPONENTS TO TRAILER ASSEMBLY

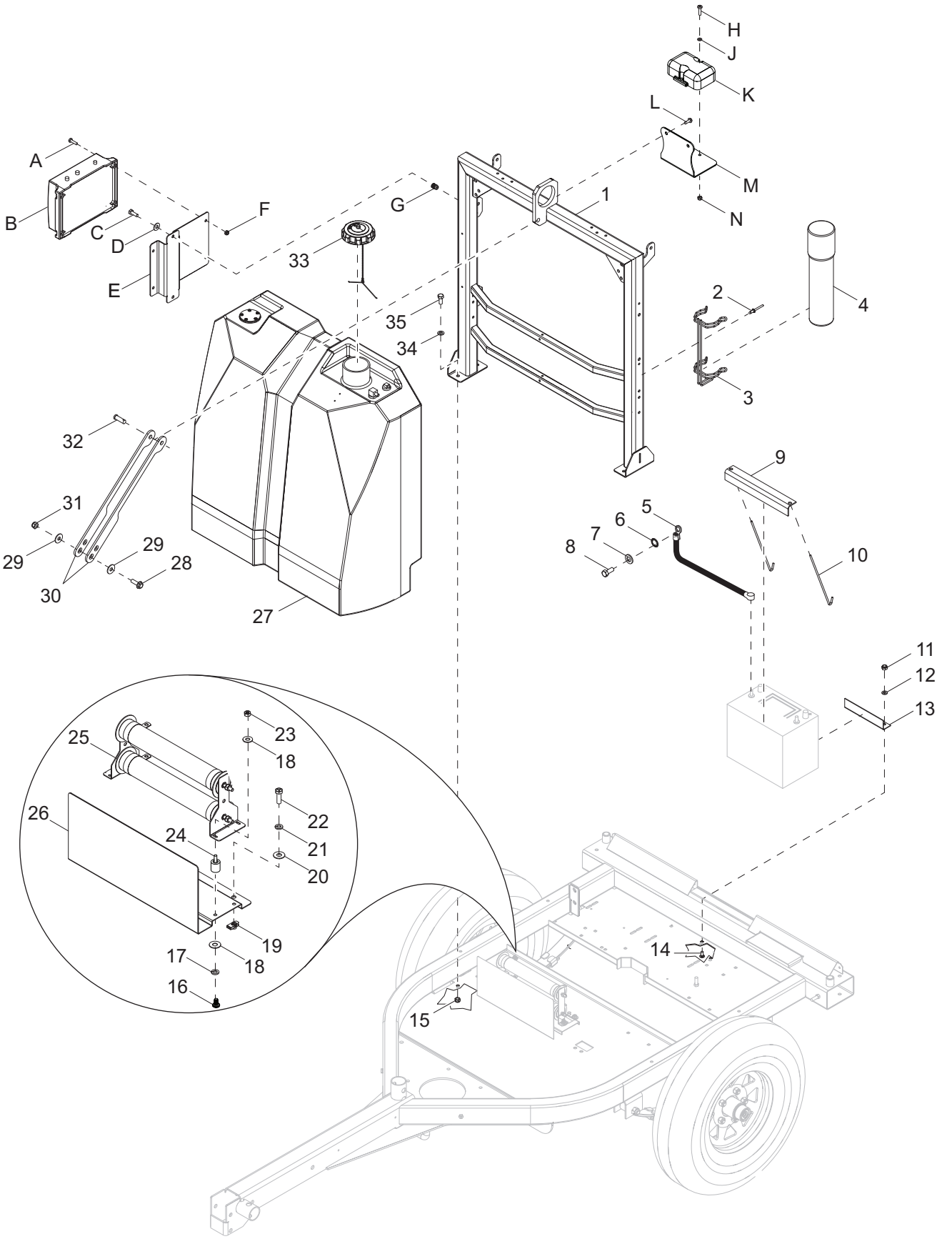

Item	Part No.	Qty	Description	Notes
1	10000023283	1	Weldment, lift support	
2	60195	2	Rivet, .188 diameter. x .375 to .500 grip	
3	11222	1	Bracket, manual holder	
4	11121	1	Manual holder tube, black 14 in	
5	10699	1	Cable, battery - 24” 4GA , .375 lug, black	
6	60747	1	Washer, .375 internal star	
7	60026	1	Washer, M10 split lock	
8	60495	1	Screw, M10-1.25 x 16 hex, G8.8	
9	12924B	1	Angle, battery hold down	
10	60820	2	Bolt, J - .250-20 x 9.0	
11	60303	1	Nut, .312-18 nylock, G2	
12	60119	2	Washer, .312 flat .875/.070	
13	17992B	1	Bracket, battery stop	
14	61066	2	Screw, .312-18 x 1.00 carriage, SS	
15	60358	4	Nut, .375-16 nylock	
16	60405	4	Screw, .6-32 x .250 pan Phillips, G2	
17	60058	4	Washer, #6 split lock	
18	60289	8	Washer, #6 flat	
19	62086	2	Nut, .312-18 U-clip - short type	
20	60119	2	Washer, .312 flat .875/.070	
21	60271	4	Washer, .312 split lock	
22	60028	2	Screw, .312-18 x 1.00 standard hex, G5	
23	60728	4	Nut, 6/32 nylock, G5	
24	10000040882	4	Isolator, 4.4/6.0 lbs - rubber	
25	10000033565	1	Resistor, 1000W	
26	10000035132	1	Bracket, resistor	
27	69919	1	Tank, fuel - 42 gal w/sending unit	
28	60484	2	Screw, .500-13 x 2.00 standard hex, G5	
29	60309	4	Washer, .500 flat 1.060/.090	
30	39660B	2	Bar, chassis support	
31	62221	2	Nut, .500-13 nylock, G5	
32	63325	1	Pin, clevis - .500 diameter. x 1.063 UL, ZP	
33	16326	1	Cap, fuel, 3.5 diameter., diesel, vent w/tether	
34	60386	4	Washer, .375 flat .993-.064	
35	60352	4	Screw, .375-16 x 1.250 standard hex, G5	
Battery Charger: If equipped				
A	60062	4	Screw, 10-32 x .750 pan Phillips, G2	
B	66212	1	Charger, battery 2-5A/1-10A, 3 stage, 2 output	
C	60281	2	Screw, .250-20 x .750 hex, G5	
D	60243	2	Washer, ,250 flat .735/.060	
E	73218B	1	Bracket, battery charger	
F	60415	4	Nut, 10-32 nylock	
G	63132	2	Insert, .250-20 splined, .027-.165	
ZTR Telemetry: If equipped				
H	60770	2	Screw, M4-0.70 x 20 pan Phillips, G4.8	
J	60237	2	Washer, #10 flat .495/.036	
K	37731	1	Telemetry, ZTR	
L	68429	2	Screw, .312-18 x .750 flange hex, G2 self-tap	
M	51002B	1	Bracket, ZTR mounting	
N	60051	2	Nut, M4-0.70 nylock, G8.8	

TRAILER ASSEMBLY

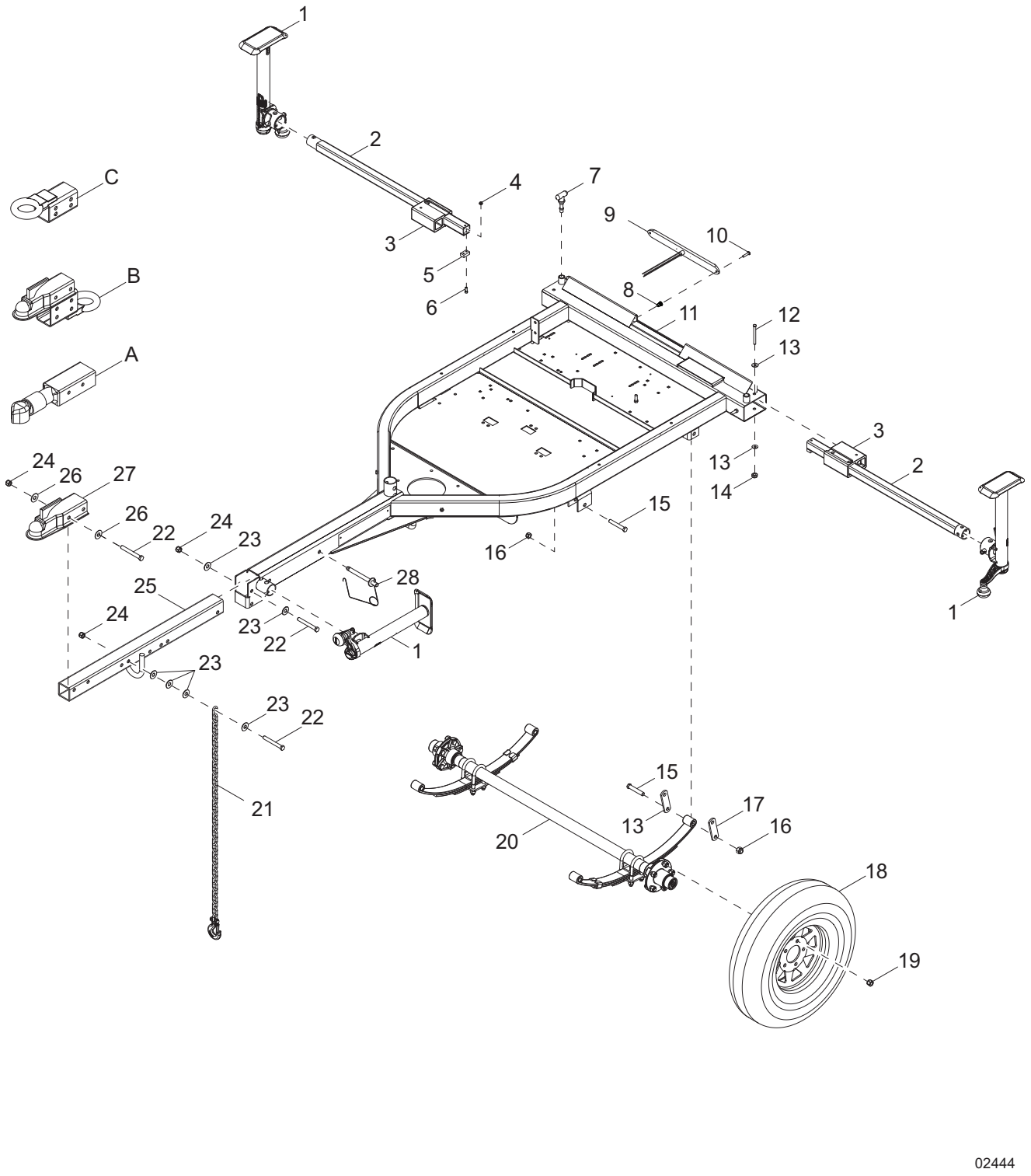

Item	Part No.	Qty	Description	Notes
1	72126	3	Jack, top wind - 1200 lb, tube mounted	
2	70230ZY	2	Weldment, outrigger tube	
3	36869	2	Guide block (molded) - outrigger	
4	60144	4	Nut, .250-20 nylock, G5	
5	72128	2	Pad/stop, wear - outrigger	
6	73196	4	Screw, .250-20 x 2.25 socket head	
7	36890	3	Spring pin, handle	
8	73092	4	Insert, #8-32 .020-.080 grip - close sealed	
9	36960	2	Assembly, tail light	
10	60694	4	Screw, 8-32 x .750 pan Phillips	
11	10000021817	1	Weldment, lt chassis	
12	60404	2	Screw, .312-18 x 4.00 standard hex, G5	
13	60119	4	Washer, .312 flat .875/.070	
14	60303	2	Nut, .312-18, nylock, G2	
15	60503	6	Screw, shackle, .562-18 x 3.00 standard hex, G5	
16	60504	6	Nut, .562-18 lock hex, G5	
17	19637	4	Plate, shackle bracket - 3.125”	
18	15976B	2	Wheel, ST175/8013 - 1360 lb	
19	60096	10	Nut, .500-20 lug, G5	
20	34760	1	Axle, 2200lb 47TC 35SC	
21	23367	2	Chain, safety - 7800 lbs rated	
22	50215	5	Screw, .500-13 x 4.00 standard hex, G5	
23	60416	10	Washer, .500 flat 1.375/.090	
24	62221	5	Nut, .500-13 nylock, G5	
25	17969B	1	Weldment, tilt tongue	
26	60309	4	Washer, .500 flat 1.060/.090	
27	16830	1	Coupler, 2.00 ball/2.50 channel	
28	33943	2	Pin, locking .500 x 3.50	
--	68348	1	Harness, trailer wiring, tandem tow	
--	68324	1	Harness, trailer enclosure front	
--	10000020727	1	Assembly, harness extension loomed	
Hitch Options: If equipped				
A	13003B	1	Coupler, 2.00 ball/3.00 channel, Bulldog	
B	34792ZC	1	Weldment, combination hitch - 2.50 tongue	
C	16835B	1	Weldment, lunette ring 3.00 ID - 2.50 tongue	
--	65548	1	Adapter, 4 pin flat to 4 pin flat x 12.00	

RECOMMENDED SPARE PARTS - ENGINE AND SERVICE KITS

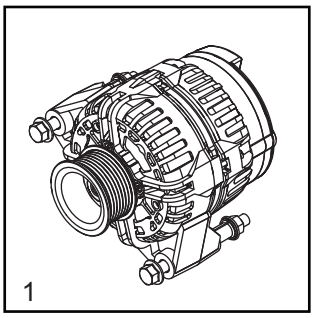
1

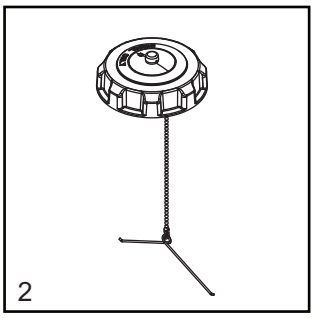
2

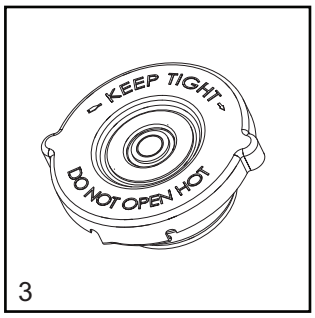

3

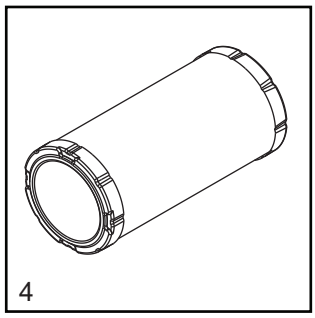
4

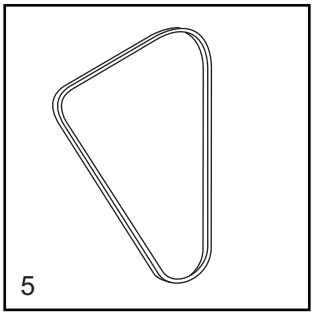
5

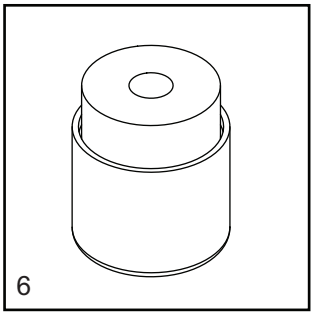
6

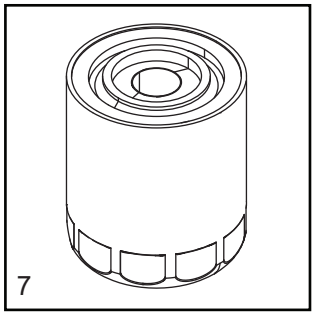
7

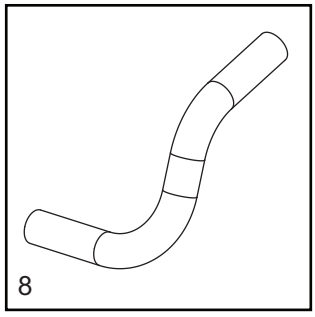
8

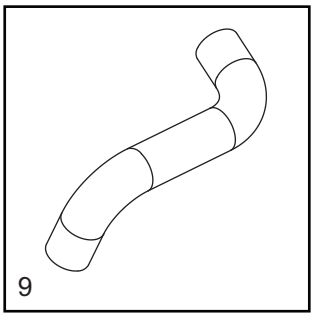
9

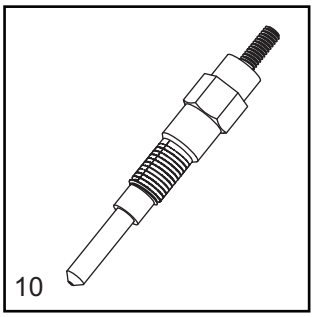
10

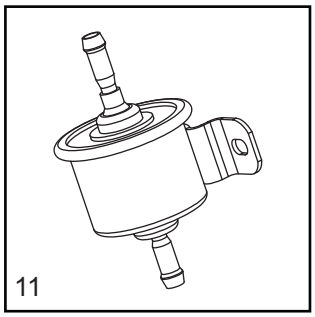
11

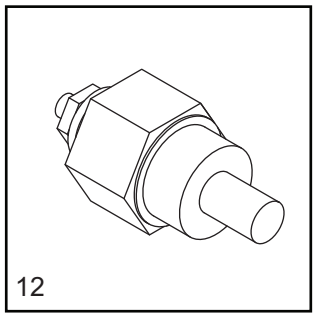
12

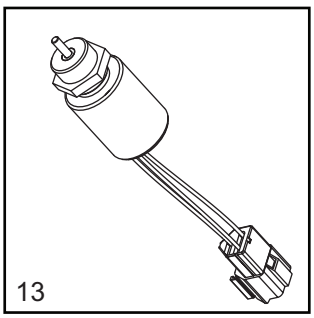
13

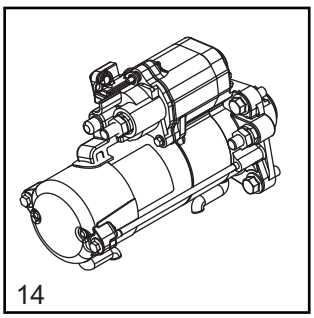
14

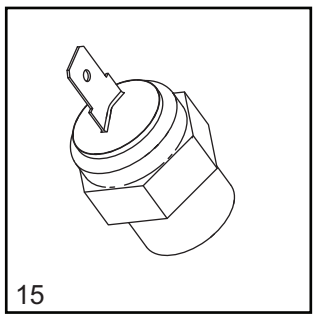
15

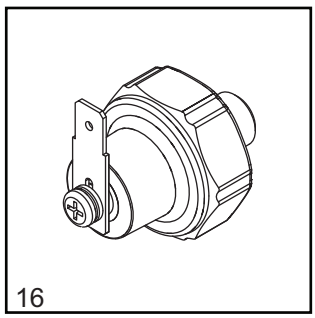
16

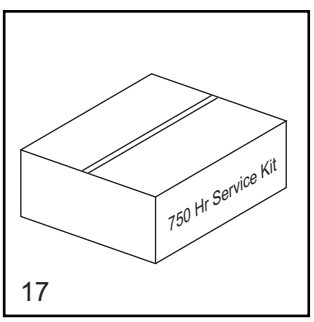

17

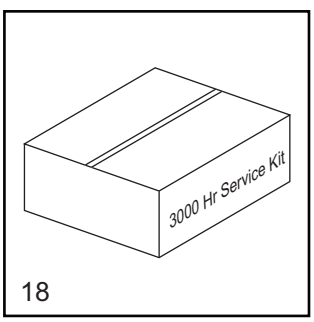

18

02701

ENGINE

1. Alternator 16743
2. Cap, fuel tank with lanyard 16326
3. Cap, radiator 19219
4. Filter, air (element) 10000035428
5. Belt 10386
6. Filter, fuel 17647
7. Filter, oil, (after break-in) 10000014392
8. Hose, radiator - lower 16688SRV
9. Hose, radiator - upper 32383SRV
10. Plug, glow 16693
11. Pump, fuel 13278SRV
12. Sender, coolant temp 11590
13. Solenoid, fuel shutdown 16683
14. Starter 70232
15. Switch, coolant temperature 16678
16. Switch, oil pressure 16677

SERVICE KITS

17. 750 hour kit SK334
Includes: Primary Air Filter 10000035428, Fuel Filter Element 17647 and Oil Filter 10000014392

18. 3000 hour kit SK335
Includes: Engine Belt 10388 (2), Air Filter 10000035428 (4), Fuel Filter Element 17647(4), and Oil Filter 10000014392 (4)

RECOMMENDED SPARE PARTS - ELECTRICAL

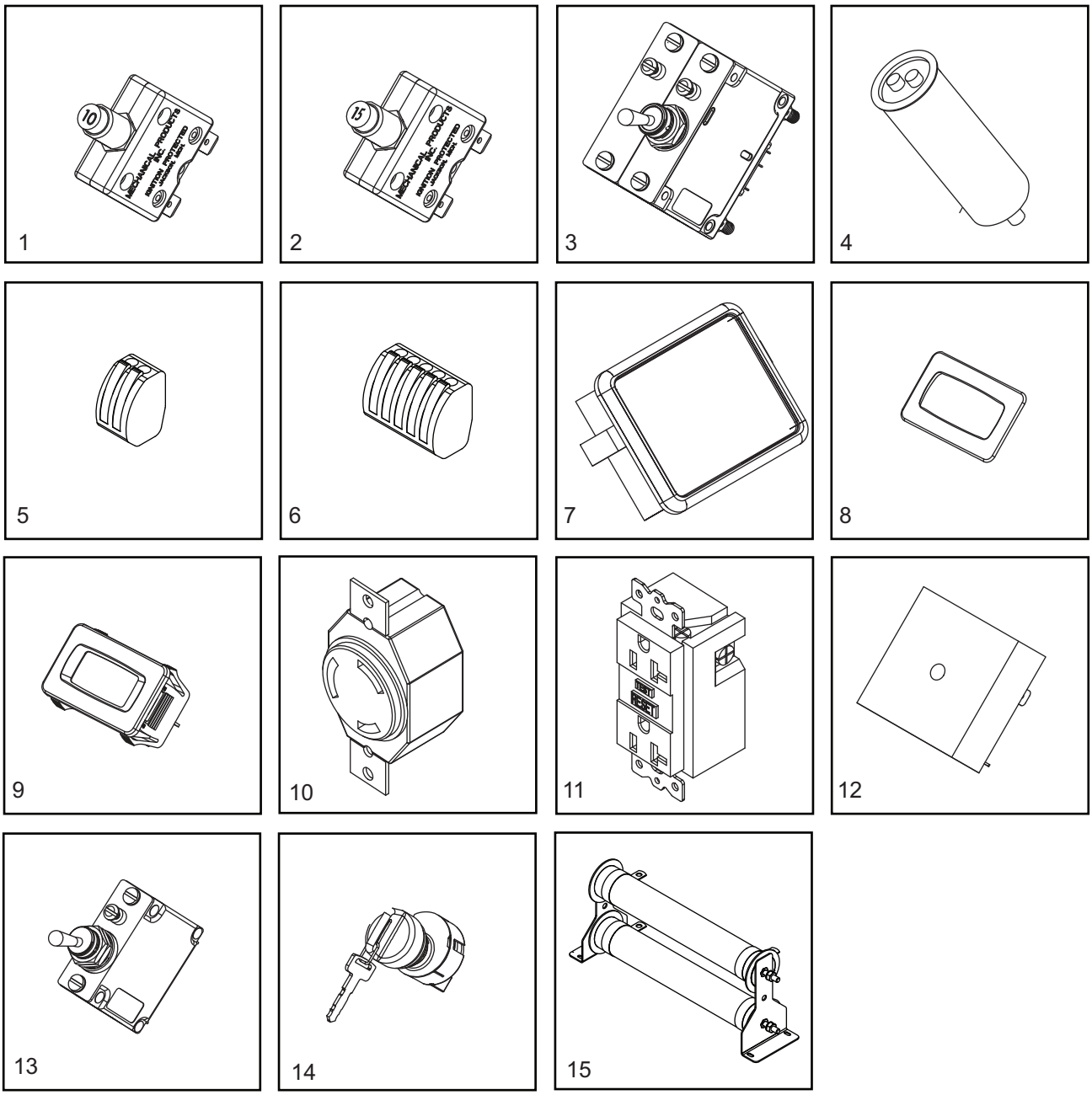

02702

ELECTRICAL

1. Breaker, 10A, 240V, 1 pole, push button 36937
2. Breaker, 15A, 120V, 1 pole, push button, 8kW 36935
3. Breaker, 30A, 250A, 2 pole, 6kW 36975
4. Capacitor, 25µF 5% 440VAC 36980
5. Connector, 2 position (qty - 4) 66100
6. Connector, 5 position (qty - 2) 66102
7. Controller- LED programmed 70137
8. Gasket, hour meter 36944
9. Gauge, hour meter 36866
10. Receptacle, 240V/30A twist 14137
11. Receptacle, 120V/20A GFI 14130
12. Relay, 10A SPDT 15 second time delay 14201
13. Switch, 10 amp 36880
14. Switch, key 36882
15. 1000 W resistor 10000033565

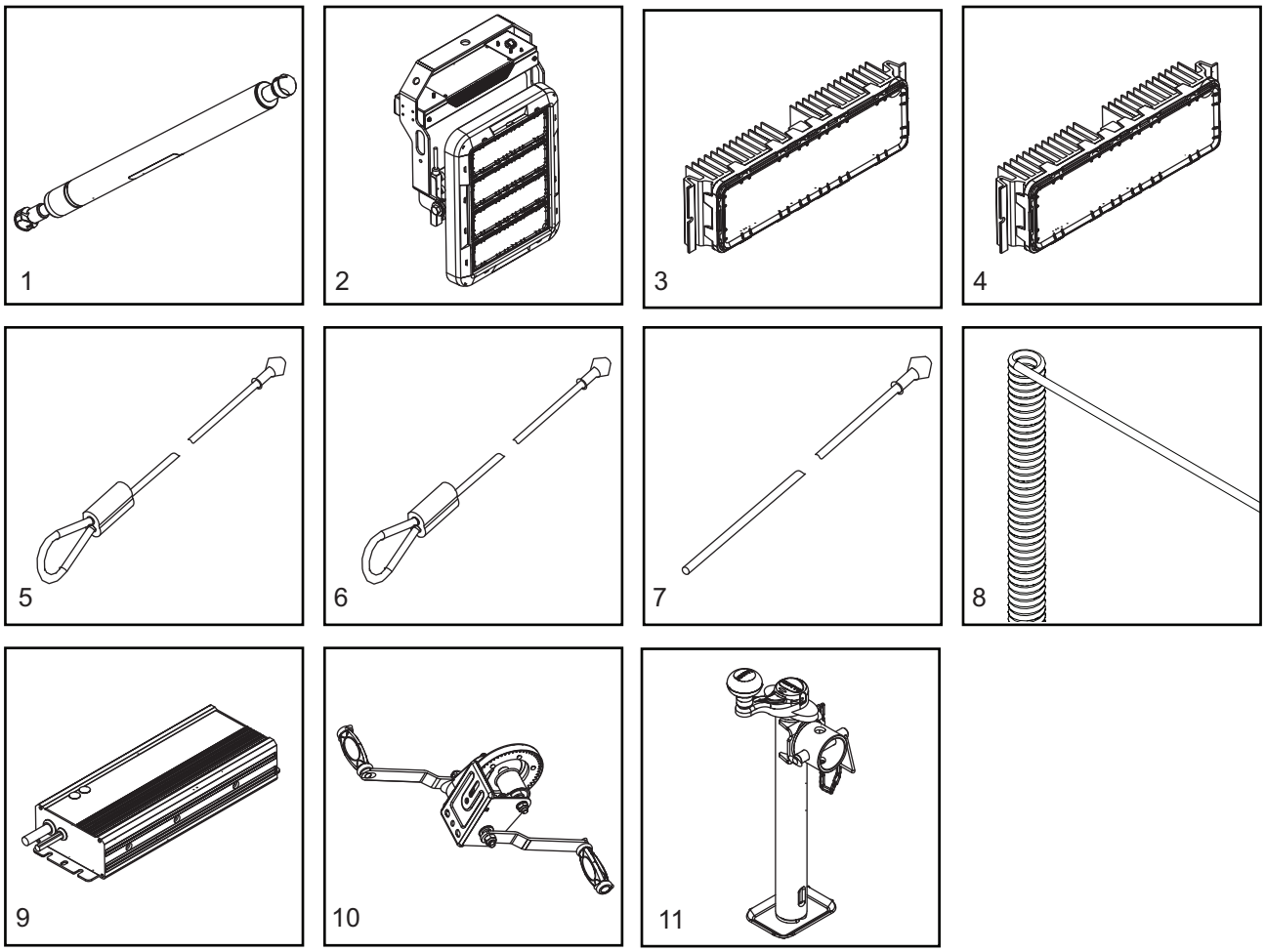

02467

ENCLOSURE

1. Gas shock 35137

MAST

2. Assembly, LED light 10000019145
3. Module 60 degree LED 10000019170
4. Module 40 degree LED 10000019160
5. Cable, 79.75 in 31248
6 Cable, 78 in 31277
7. Cable, 144 in 31247
8. Coil cord w/ 120 inch tail 39650
9. Driver, LED 30V, 10.7A, 320W 10000019146
10. Winch, manual, includes dual handle 72127

JACKS

11. Jack, top wind, 1200 lb 72126

Part No. 10000037191 Rev. A 09/05/2018

©2018 Generac Mobile Products, LLC
All rights reserved.
Specifications are subject to change without notice.
No reproduction allowed in any form without prior written consent from Generac Mobile Products, LLC.

Generac Mobile Products, LLC
215 Power Drive, Berlin, WI 54923
GeneracMobileProducts.com | 800-926-9768 | 920-361-4442