GENERAC® | MAGNUM

MDG175DF4

Diesel Generator Parts Manual

Prior to S/N 3002692330

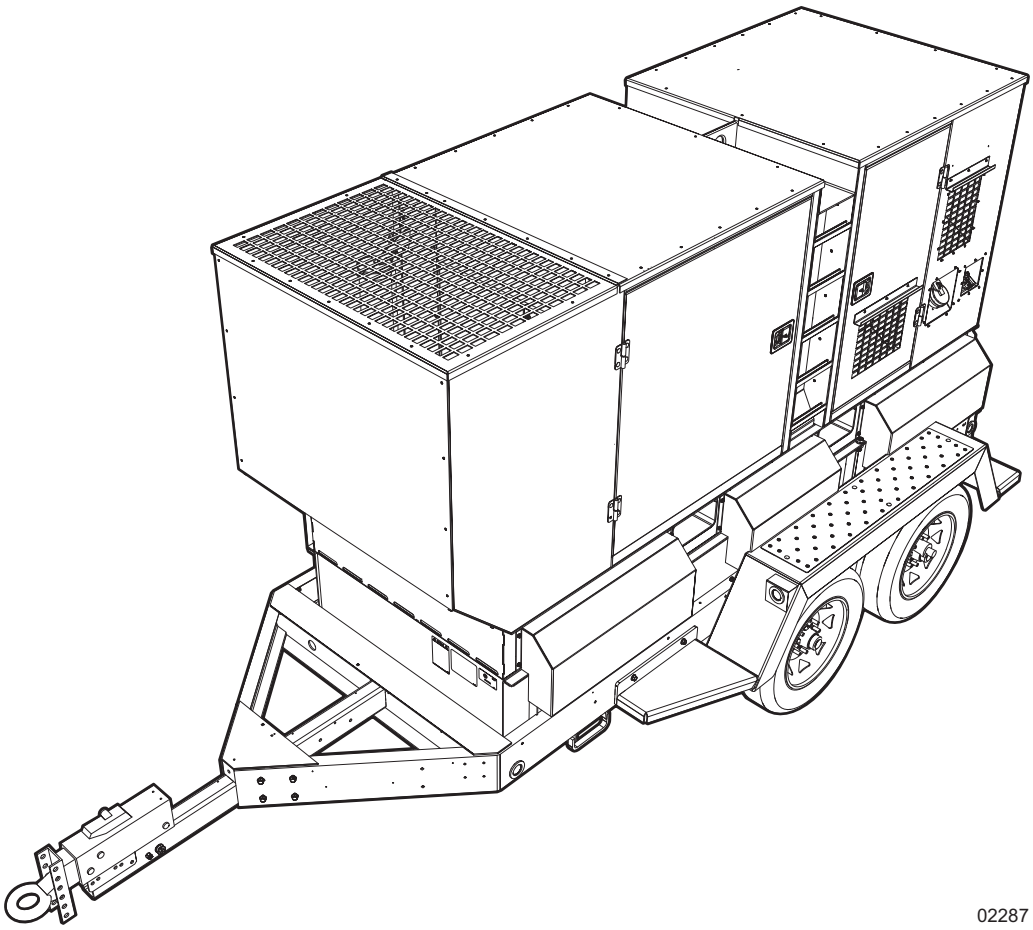

02287

MODEL NUMBER: _____

SERIAL NUMBER: _____

DATE PURCHASED:_____

SAVE THIS MANUAL FOR FUTURE REFERENCE

⚠ WARNING

Breathing diesel engine exhaust exposes you to chemicals known to the State of California to cause cancer and birth defects or other reproductive harm.

- Always start and operate the engine in a well-ventilated area.
- If in an enclosed area, vent the exhaust to the outside.
- Do not modify or tamper with the exhaust system.
- Do not idle the engine except as necessary.

For more information go to www.P65Warnings.ca.gov/diesel. (000394)

Introduction

This parts manual was prepared based on the information available at the time of publication and is subject to change without notice. Generac Mobile Products reserves the right to change parts at any time. To check whether a revised parts manual is available, contact Generac Mobile Products.

DO NOT MODIFY or use this equipment for any application other than which it was designed for. To keep your equipment fully operational, it is suggested you maintain a stock of commonly used maintenance or service parts. A recommended spare parts list can be found in the back of this manual. To order service parts, go to **www.generacmobilepoducts.com** or call Generac Mobile Products.

⚠WARNING

Consult Manual. Read and understand manual completely before using product. Failure to completely understand manual and product could result in death or serious injury. (000100a)

⚠WARNING

Environmental Hazard. Always recycle batteries at an official recycling center in accordance with all local laws and regulations. Failure to do so could result in environmental damage, death or serious injury. (000228)

GENERAC MOBILE PRODUCTS LLC

215 Power Drive • Berlin, WI 54923 U.S.A.
Phone: 920-361-4442
FAX: 920-361-4416
Toll Free: 1-800-926-9768
www.generacmobileproducts.com

For technical or parts QUESTIONS, contact Generac Mobile Products Technical Service at 1-800-926-9768.

Engine Make:_____
Engine Serial Number:_____
Engine Model Number: _____

This Page Intentionally Left Blank

Table of Contents

Introduction iii
- General Information 1
- Unit Decals - Exterior 2
- Unit Decals - Interior 4
- Unit Decals - Control Panel 6
- Unit Decals - Power Panel 8
- Enclosure Panels 10
- Roof and Doors to Unit 12
- Enclosure Frame Assembly 14
- Front Enclosure Assembly 16
- Door Assembly - Controls - Top and Bottom 18
- Door Assembly - Rear Left 20
- Door Assembly - Rear 22
- Door Assembly - Front Left 24
- Door Assembly - Front Right 26
- Fuel Panel Assembly 28
- Receptacle / E-stop Panel Assembly 30
- Receptacle Panel Assembly 32
- Control Panel Door Assembly 34
- Control Panel Assembly (2 of 2) 36
- Control Panel Assembly (1 of 2) 38
- Breaker/Lug Box Assembly 40
- Breaker and Lug Assembly 42
- Air Filter Assembly 44
- Cooling System Assembly 46
- Cooling System Hoses 48
- Lift Structure 50
- Engine and Generator To Unit 52
- Engine Block Heater (If Equipped) 54
- Engine Assembly 56
- Generator Assembly 58
- Exhaust & After Treatment Assembly 60
- Exhaust & DEF Assembly 62
- Skid and Fuel Tank Assembly 64
- Trailer Assembly 66
- Axle Assembly 68
- Brake Line Assembly 70
- Recommended Spare Parts - Engine and Service Kits 72
- Recommended Spare Parts - Electrical and Trailer 74

This Page Intentionally Left Blank

General Information

Products supplied may vary from the illustrations in this parts manual. Parts not shown in the illustration are indicated by a double dash (--) in the item column.

When ordering replacement parts, be prepared to provide the model number, serial number, part number, purchase order number (if required), customer ID, shipping address and desired shipping method.

Note: *Illustrated below are the unit identification tag and the VIN rag. These tags contain the model number, serial number, vehicle identification number (VIN) and tire loading information.*

UNIT ID Tag

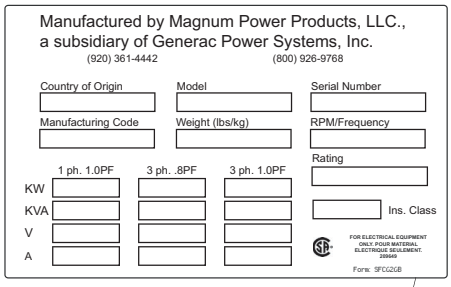

Located on control panel (behind door)

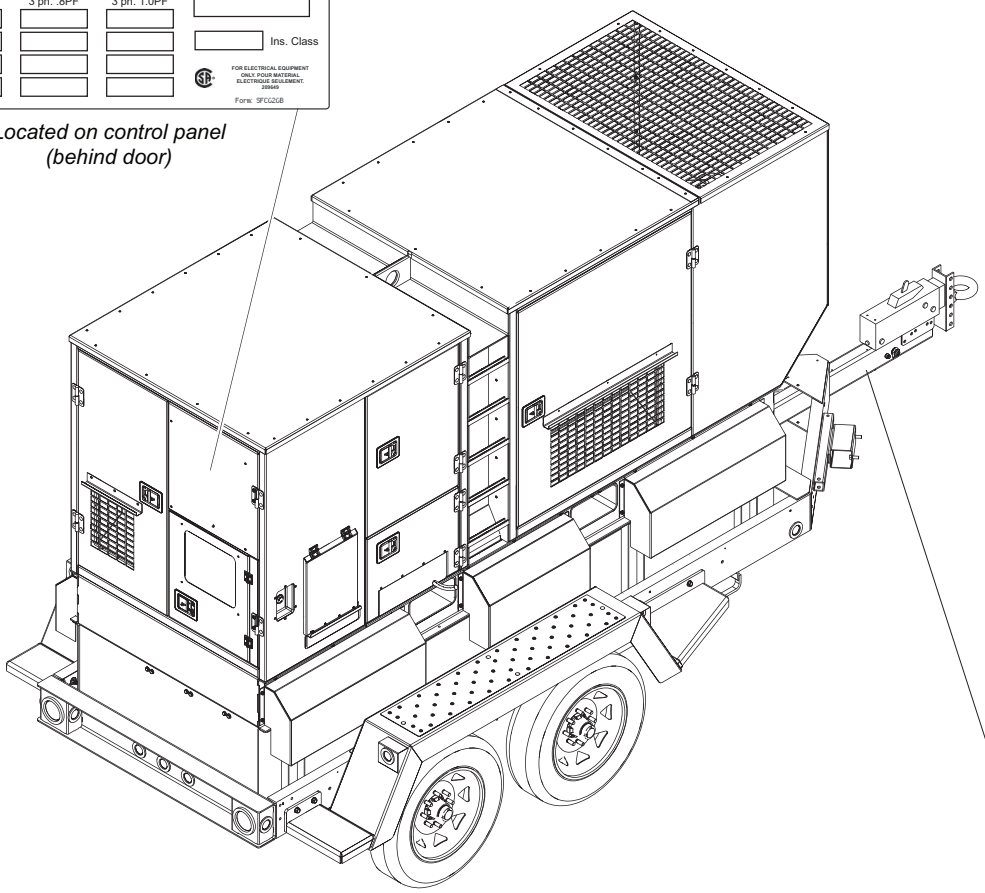

VIN Tag

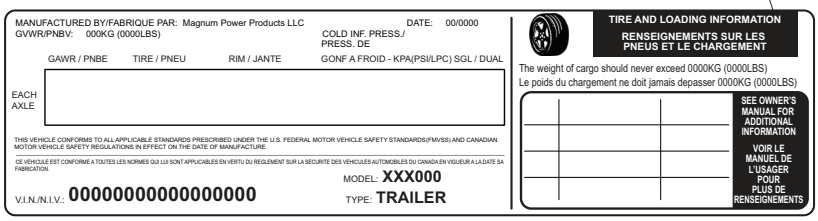

02288

UNIT DECALS - EXTERIOR

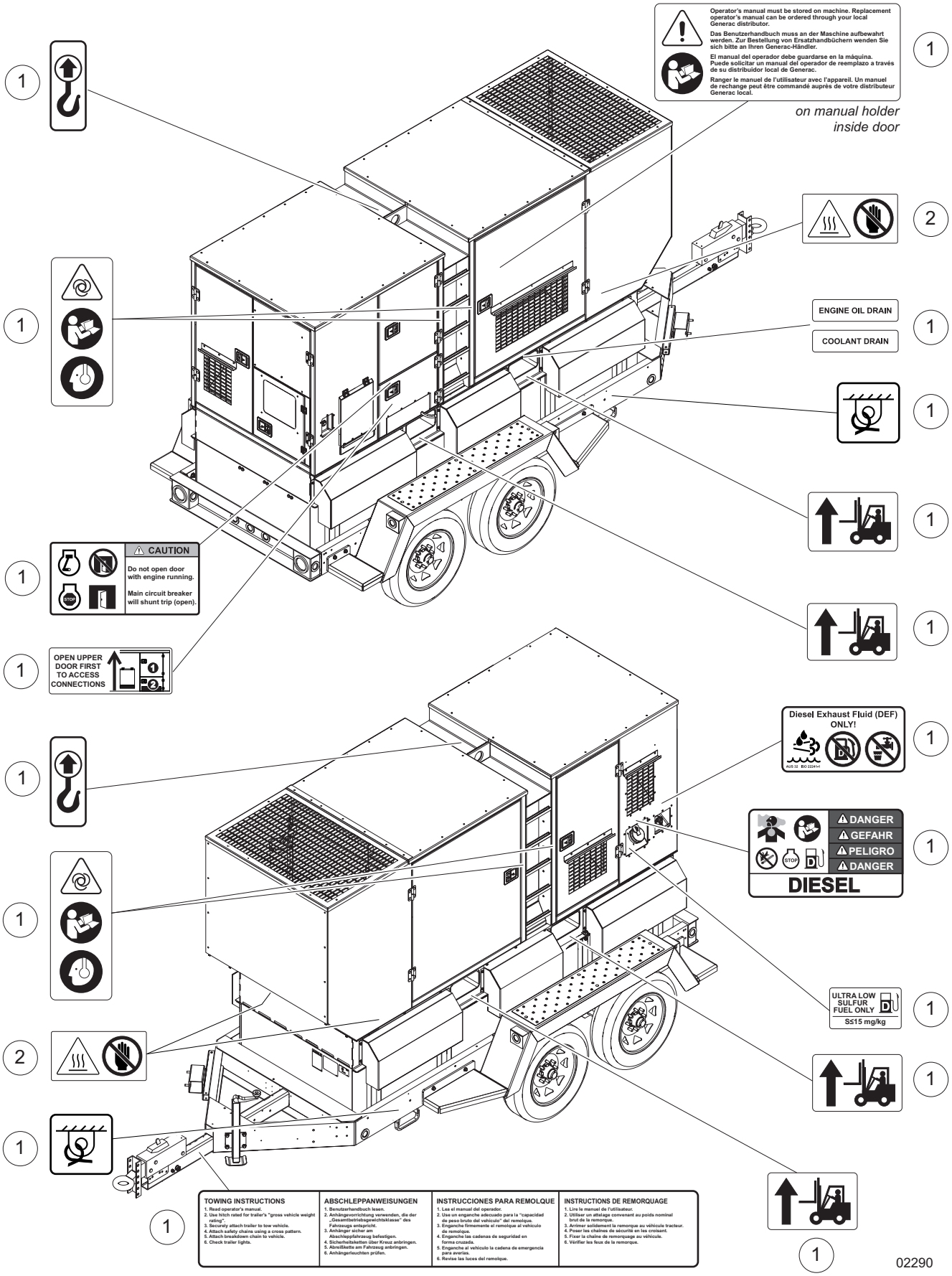

Item	Part No.	Qty	Description	Notes
1	51551	1	Decal set, safety	
2	51552	3	Decal, high temp warning	

UNIT DECALS - INTERIOR

.

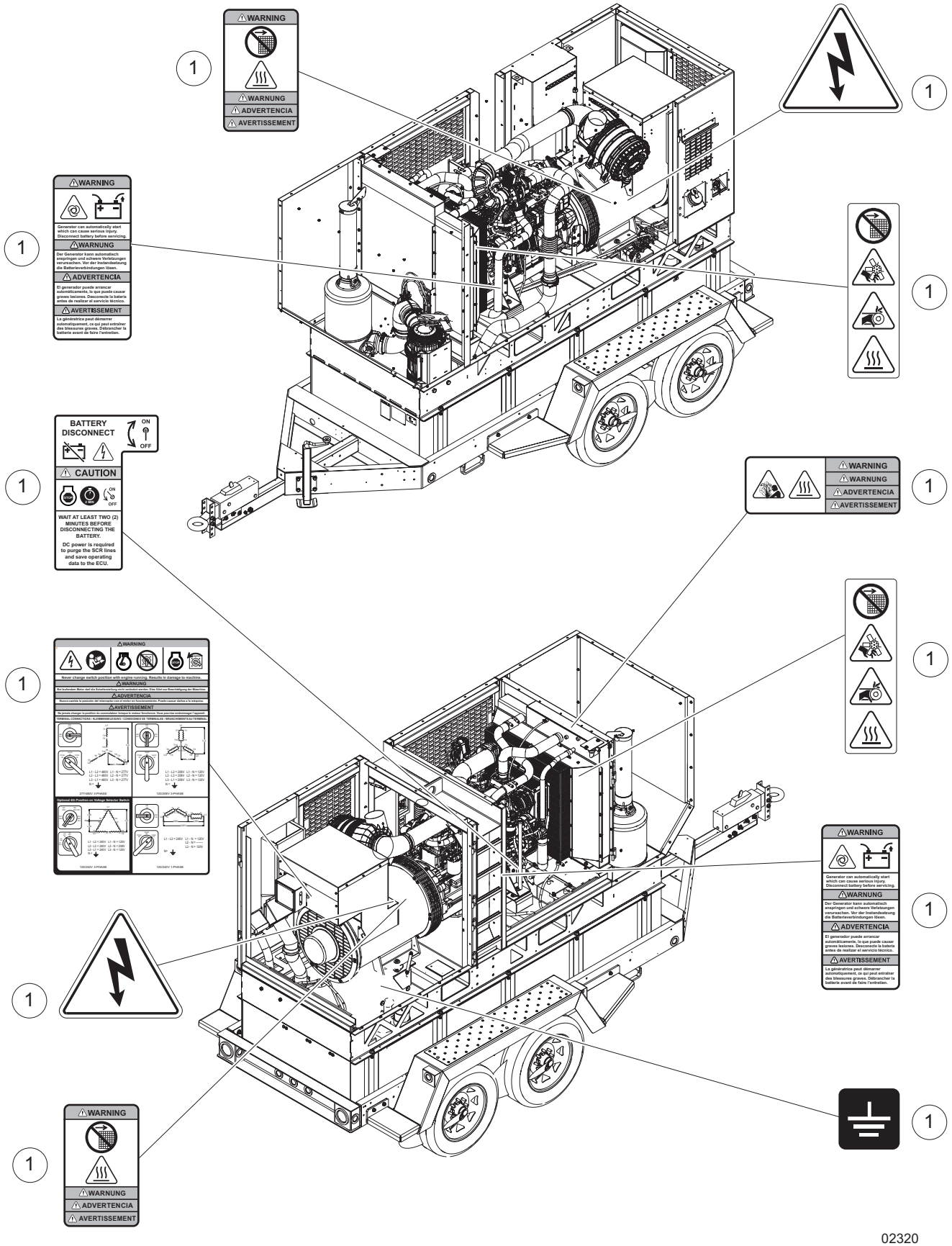

Item	Part No.	Qty	Description	Notes
1	51551	1	Decal set, safety	

UNIT DECALS - CONTROL PANEL

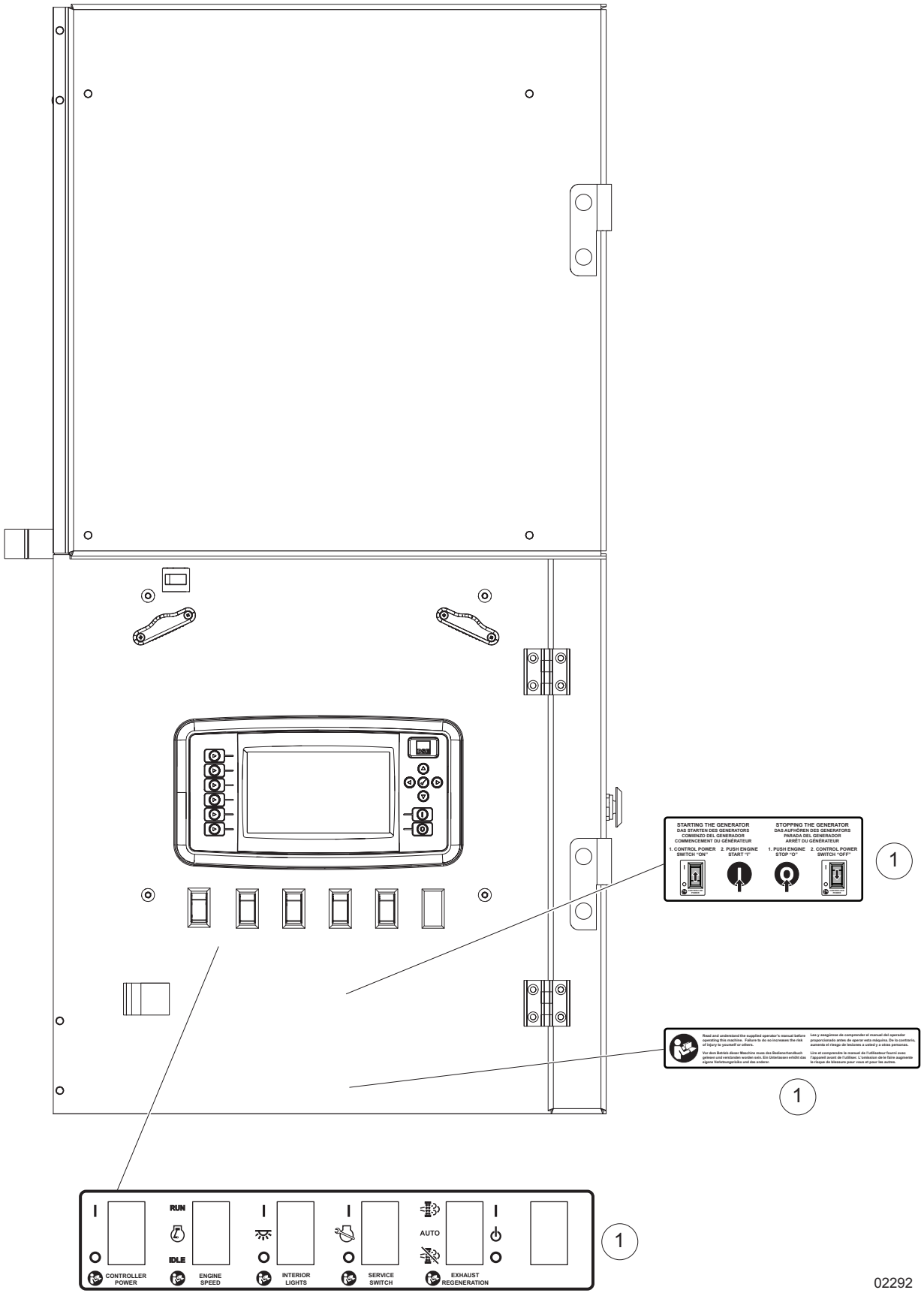

Item	Part No.	Qty	Description	Notes
1	51550	1	Decal set, controls	

UNIT DECALS - POWER PANEL

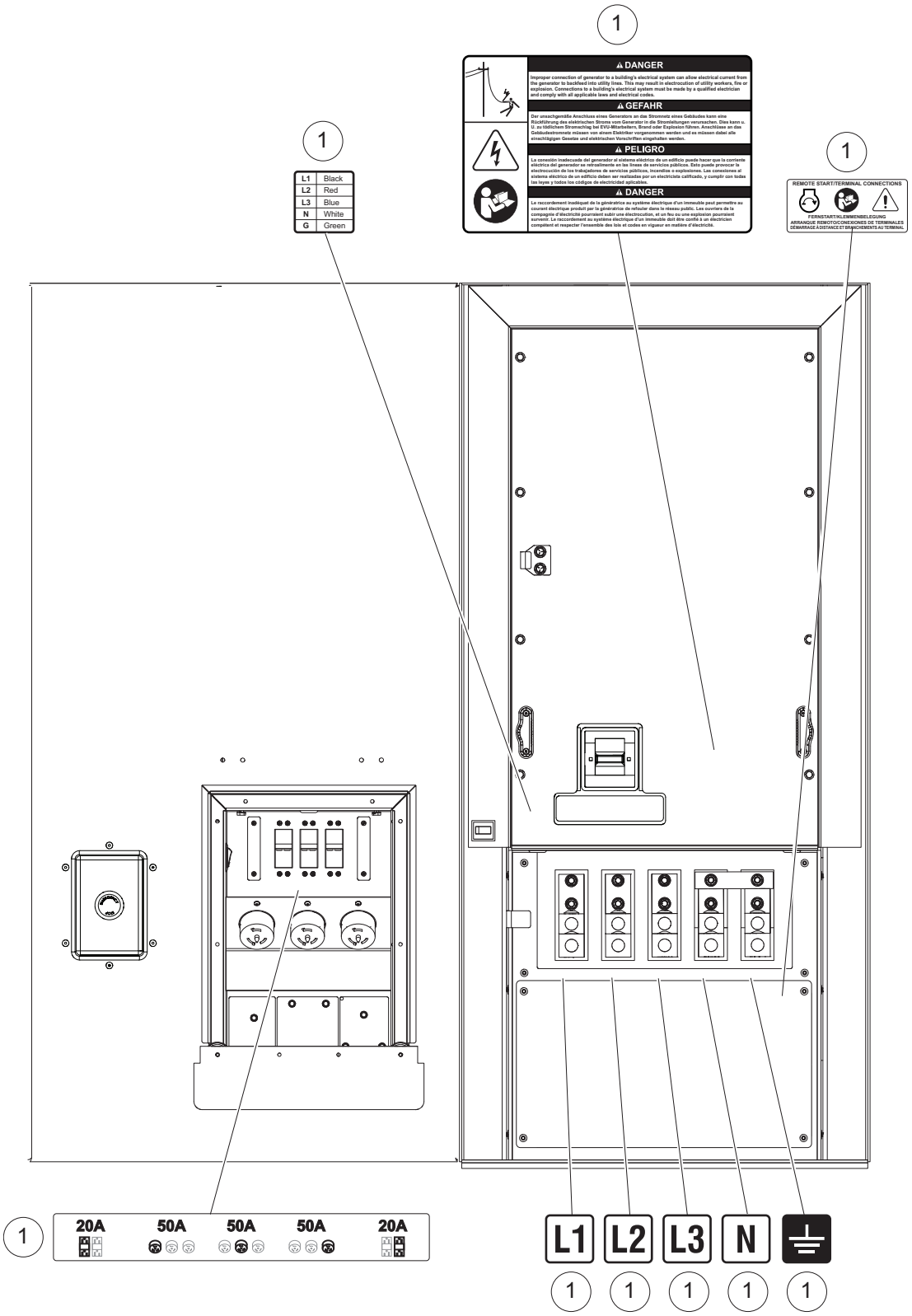

02293

Item	Part No.	Qty	Description	Notes
1	51551	1	Decal set, safety	

ENCLOSURE PANELS

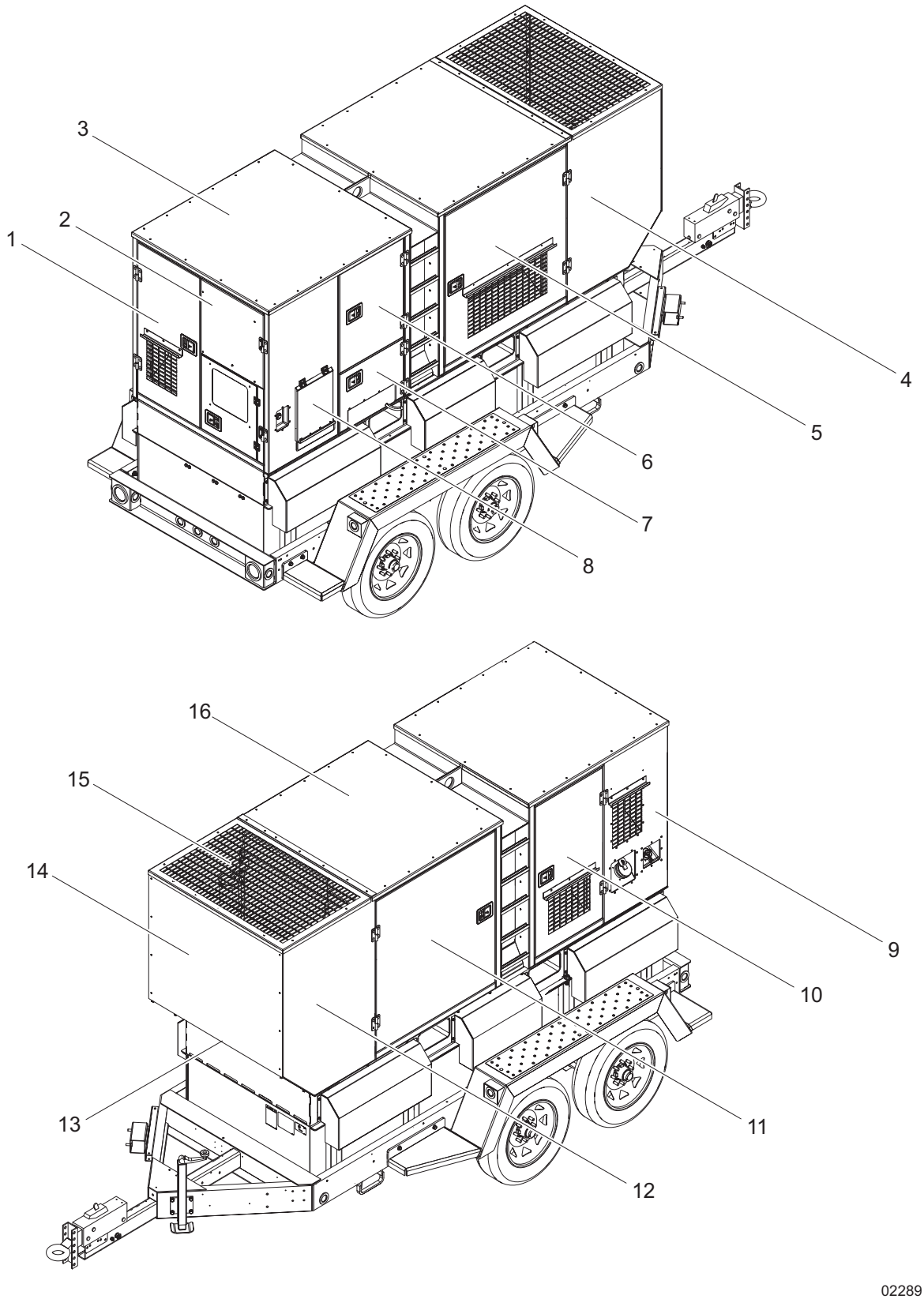

Item	Part No.	Qty	Description	Notes
1	10000017428	1	Assembly, rear door	*Page 22*
2	10000017497	1	Assembly, control door	*Page 34*
3	54920W	1	Panel, top plate - back	*Page 12*
4	10000017461	1	Assembly, front panel - right	*Page 16*
5	10000017475	1	Assembly, front door - right	*Page 26*
6	10000017429	1	Assembly, control door - top	*Page 18*
7	10000017467	1	Assembly, control door - bottom	*Page 18*
8	10000017520	1	Assembly, e-stop panel	*Page 30*
9	10000017453	1	Assembly, rear panel - left hand	*Page 28*
10	10000017439	1	Assembly, rear door - left	*Page 20*
11	10000017490	1	Assembly, front door - left	*Page 24*
12	10000017449	1	Assembly, front panel - left	*Page 16*
13	10000017492	1	Assembly, front access panel	*Page 16*
14	10000017419	1	Assembly, front panel	*Page 16*
15	53691B	1	Panel, roof - fwd	*Page 12*
16	54919W	1	Panel, top cover - front	*Page 12*

ROOF AND DOORS TO UNIT

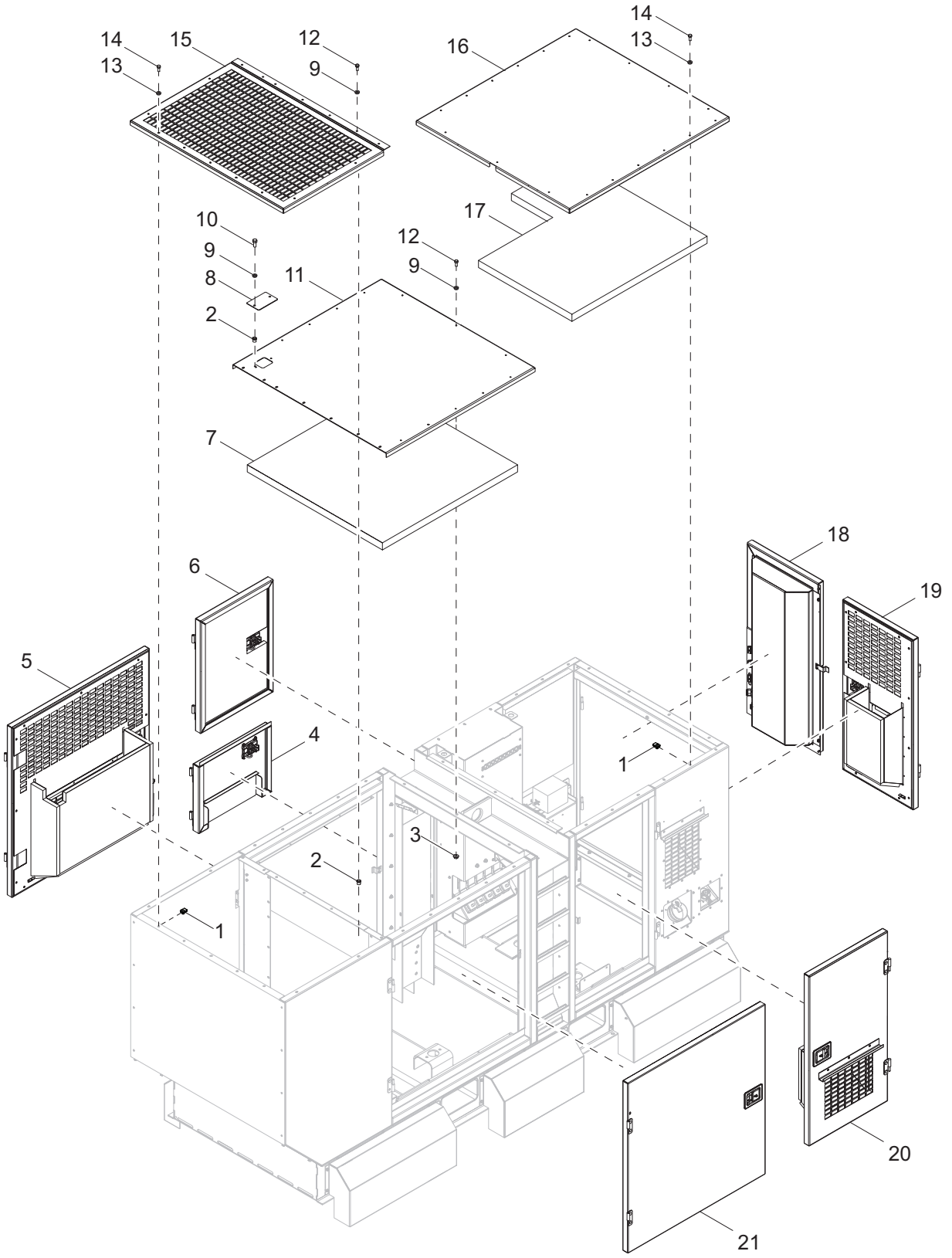

Item	Part No.	Qty	Description	Notes
1	15424	35	Nut, .250-20 cage, G5	
2	62133	9	Insert, threaded .312-18 splined .027-.150 grip	
3	60161	6	Nut, .250-20 serrated flange, G5	
4	10000017467	1	Assembly, controls door - bottom	
5	10000017475	1	Assembly, front door - curbside	
6	10000017429	1	Assembly, control door - top	
7	10000017540	1	Foam, top front	
8	11096W	1	Panel, radiator access	
9	10000017789	12	Washer, sealing .275ID .75OD	
10	60687	2	Screw, .312-18 x .750 standard hex- SS	
11	54919W	1	Panel, top cover - front	
12	60507	12	Screw, .312-18 x 1.00 standard hex - SS	
13	69968	35	Washer, sealing .26ID x .50OD - neoprene	
14	61195	35	Screw, .250-20 x .750 standard hex - SS	
15	53691B	1	Panel, roof - forward	
16	54920W	1	Panel, top plate - back	
17	10000017494	1	Foam, top back	
18	10000017497	1	Assembly, controls door	
19	10000017428	1	Assembly, rear door - left	
20	10000017439	1	Assembly, front panel - left	
21	10000017490	1	Assembly, front door - left	

ENCLOSURE FRAME ASSEMBLY

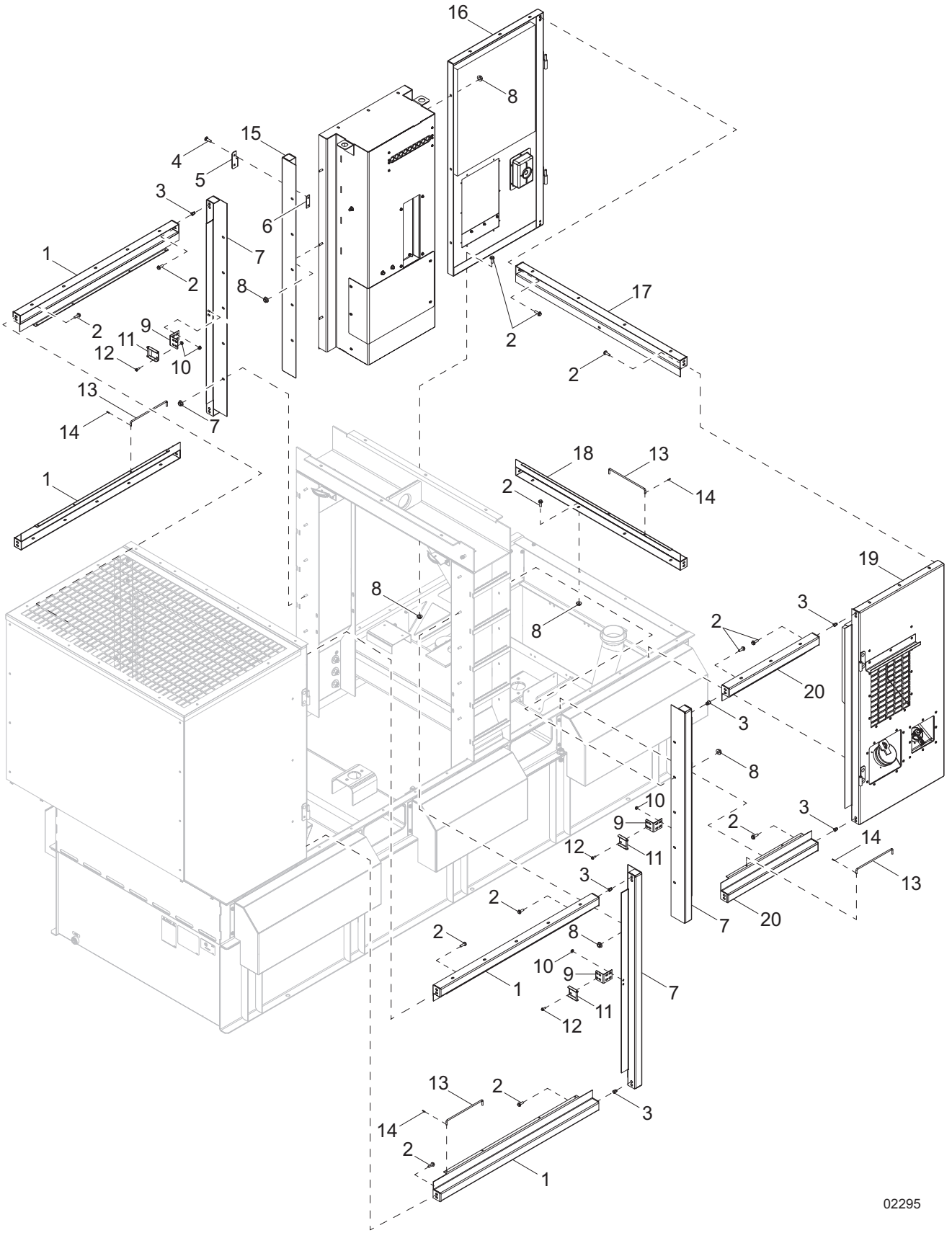

Item	Part No.	Qty	Description	Notes
1	54892W	4	Support, top - long	
2	60616	58	Screw, .312-18 x 1.25 serrated flange hex	
3	63097	16	Insert, threaded .312-18 hex .027-.150 grip	
4	63346	8	Screw, .312-18 x 1.00 Scytrx- SS	
5	18460B	4	Hinge, left (female)	
6	10000011935	4	Plate, hinge back - threaded	
7	54890W	3	Panel, door frame - small	
8	60095	26	Nut, .312-18 serrated flange	
9	10000013491	3	Striker, side angle	
10	60161	14	Nut, .250-20 serrated flange, G5	
11	10000013494	3	Weldment, striker	
12	60175	6	Screw, .250-20 x .500 serrated flange hex, G5	
13	18900ZC	4	Rod, door prop	
14	60048	4	Pin, roll .125 x .625	
15	54928W	1	Panel, power distribution - door mount	
16	10000017520	1	Assembly, receptacle/e-stop panel	
17	54934W	1	Support, cross panel top - back	
18	54893W	1	Support, bottom - back	
19	10000017453	1	Assembly, rear panel - left hand	
20	54891W	2	Support, top - short	

FRONT ENCLOSURE ASSEMBLY

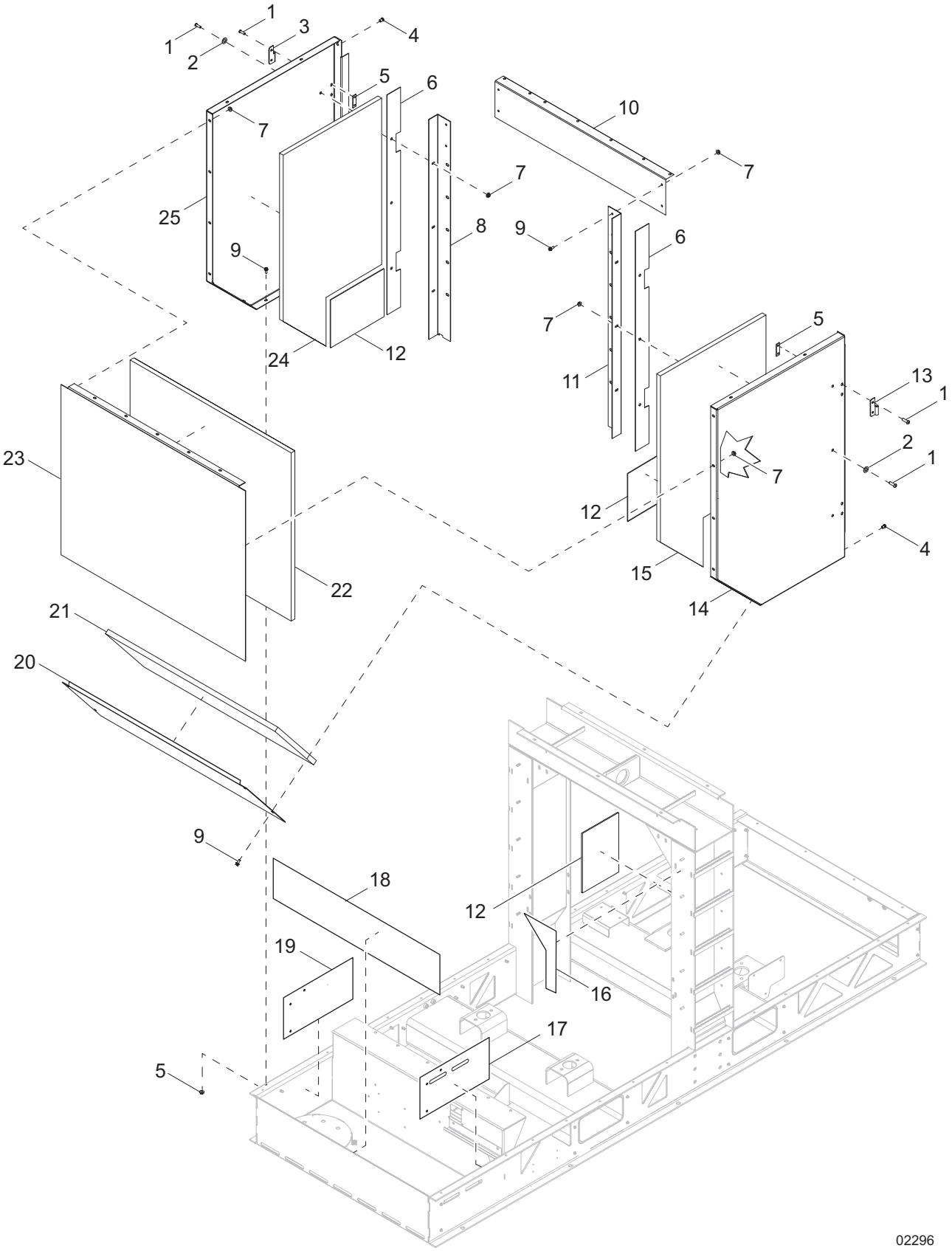

Item	Part No.	Qty	Description	Notes
1	63346	14	Screw, .312-18 x 1.00 Scytrx - SS	
2	60340	6	Washer, .312 flat .875/.040 SS	
3	18460B	2	Hinge, left (female)	
4	63097	8	Insert, threaded .312-18 hex .027-.150 grip	
5	36672ZC	4	Plate, hinge back - threaded	
6	10000017575	2	Foam, bulkhead spacer	
7	60095	27	Nut, .312-18 serrated flange hex	
8	54923B	1	Bulkhead, curbside	
9	60616	12	Screw, .312 x .750 serrated flange hex, G5	
10	53576B	1	Panel, upper bulkhead	
11	54909B	1	Bulkhead, drivers side	
12	10000017545	3	Insulation, heat turbo	
13	18462B	2	Hinge, right (female)	
14	54889W	1	Panel, front - left	
15	10000017465	1	Foam, front panel - left	
16	10000017486	1	Insulation, heat lift	
17	10000017559	1	Insulation.heat DOC	
18	10000017580	1	Insulation, heat skid front	
19	10000017487	1	Insulation, heat SRC	
20	54685W	1	Panel, forward access	
21	10000017503	1	Foam, forward access	
22	10000017541	1	Foam, front panel	
23	54679W	1	Panel, front	
24	10000017522	1	Foam, front right	
25	54887W	1	Panel, front - right	

DOOR ASSEMBLY - CONTROLS - TOP AND BOTTOM

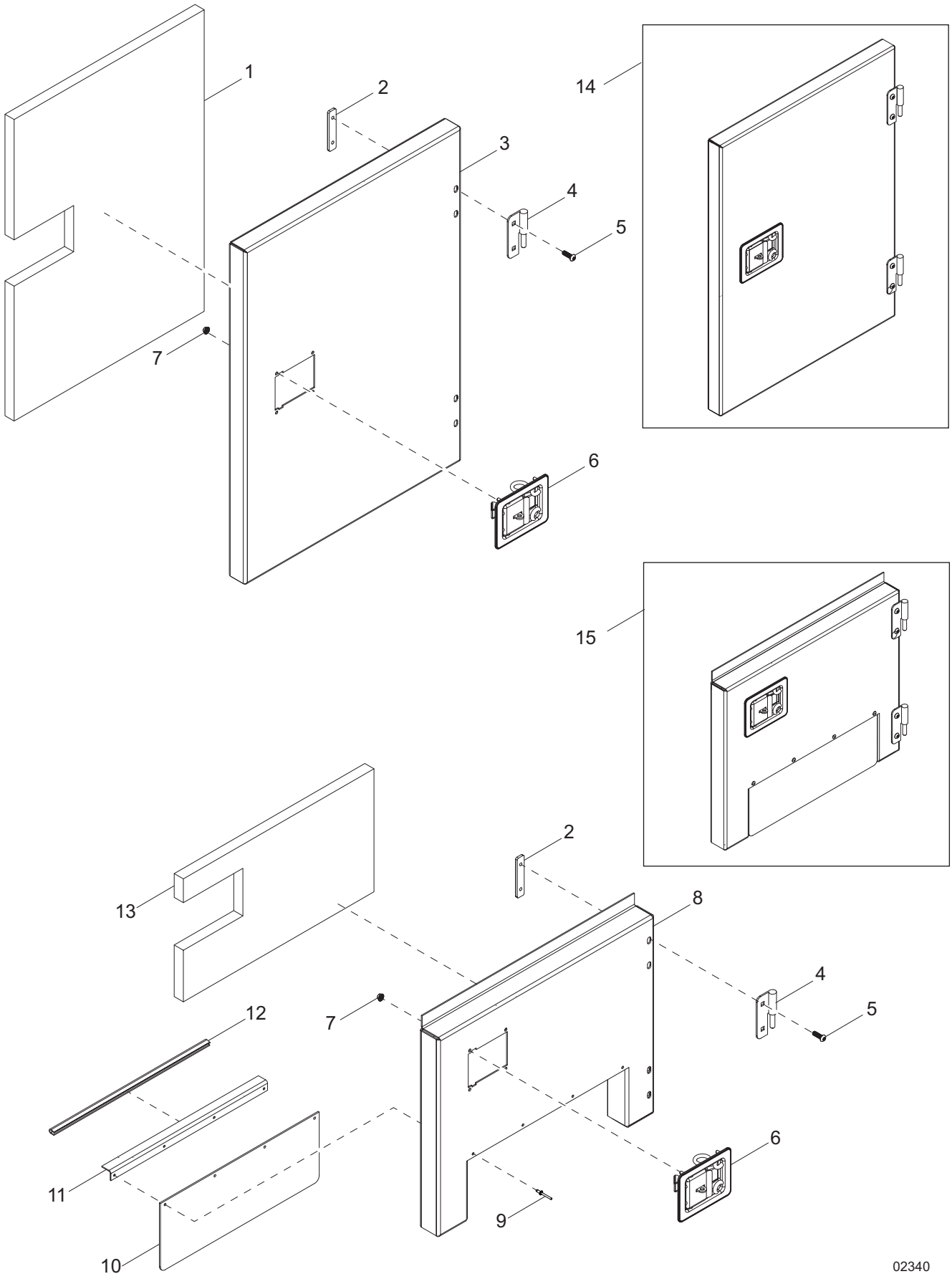

DOOR ASSEMBLY - CONTROLS - TOP AND BOTTOM

Item	Part No.	Qty	Description	Notes
1	10000017399	1	Foam, controls door	
2	10000011935	4	Plate, hinge back - threaded	
3	54024W	1	Door, controls - top	
4	18461B	4	Hinge, left - male	
5	63346	8	Screw, .312-18 x 1.00 Scytrx - SS	
6	54777	2	Latch, paddle slam - black	
7	60036	8	Nut, M6-1.00 serrated flange, G8.8	
8	54026W	1	Door, controls - bottom	
9	60268	4	Rivet, .188 diameter x .126 to .250 grip	
10	54027	1	Flap	
11	54028W	1	Bracket, door flap	
12	56326	1	Guard, edge	
13	10000017493	1	Foam, lower control door	
14	10000017429	1	Assembly, control door - top	Items 1-7
15	10000017467	1	Assembly, control door - bottom	Items 2,4-13

DOOR ASSEMBLY - REAR LEFT

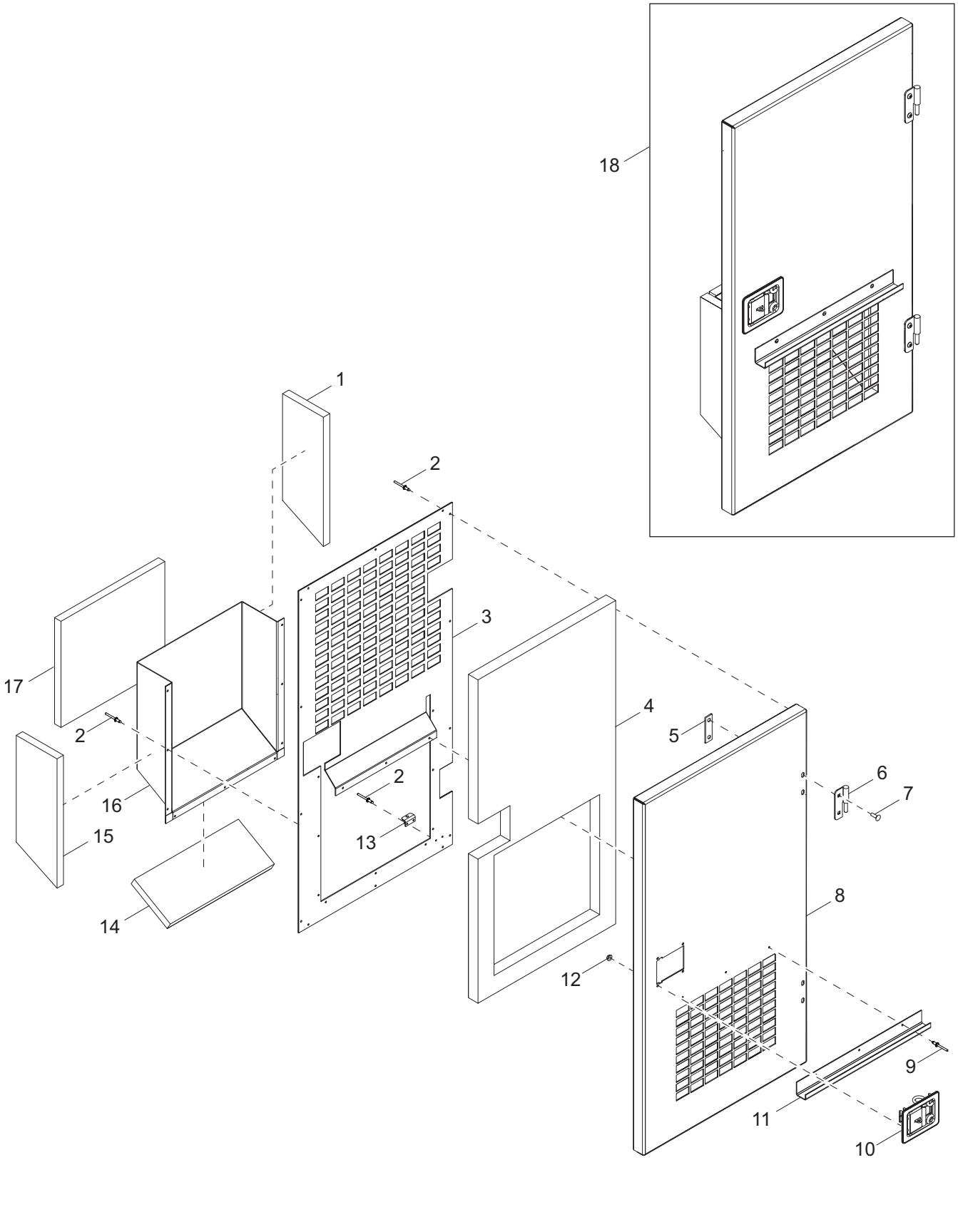

Item	Part No.	Qty	Description	Notes
1	10000017463	1	Foam, vent panel - left hand	
2	60268	25	Rivet, .188 diameter x .126 to .250 grip	
3	54729B	1	Panel, door inside	
4	10000017507	1	Foam, door	
5	36672ZC	2	Plate, hinge back - threaded	
6	18461B	2	Hinge, left - male	
7	63346	4	Screw, .312-18 x 1.00 Scytrx - SS	
8	54902W	1	Panel, rear door - left hand	
9	60260	3	Rivet, .188 diameter x .375 to .50 grip - SS	
10	54777	1	Latch, paddle slam - black	
11	54767W	1	Gutter, rain left hand door	
12	60036	4	Nut, M6-1.00 serrated flange, G8.8	
13	20916Z	1	Bracket, prop rod	
14	10000017398	1	Foam, vent panel - bottom	
15	10000017426	1	Foam, vent panel - right hand	
16	54730W	1	Panel, door vent	
17	10000017474	1	Foam, vent panel - top	
18	10000017439	1	Assembly, rear door - left	

DOOR ASSEMBLY - REAR

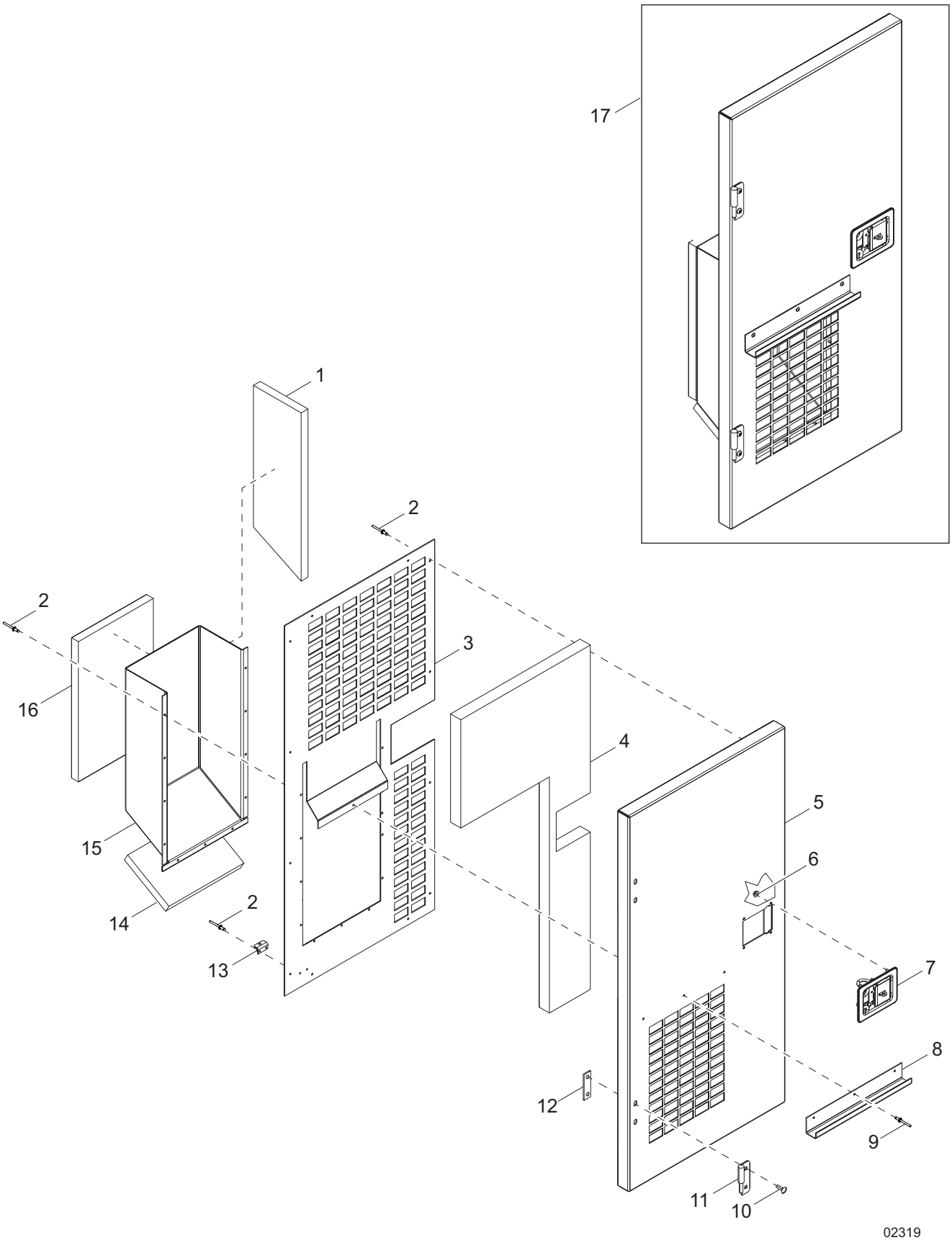

Item	Part No.	Qty	Description	Notes
1	10000017436	1	Foam, rear door - left hand	
2	60268	25	Rivet, .188 diameter x .126 to .250 grip	
3	54187B	1	Panel, inner door	
4	10000017477	1	Foam, rear door	
5	54907W	1	Panel, rear door	
6	60036	4	Nut, M6-1.00 serrated flange, G8.8	
7	54777	1	Latch, paddle slam - black	
8	54768W	1	Gutter, rear door - rain	
9	60260	3	Rivet, .188 diameter x .375 to .50 grip - SS	
10	63346	4	Screw, .312-18 x 1.00 Scytrx - SS	
11	18459B	2	Hinge, right - male	
12	36672ZC	2	Plate, hinge back - threaded	
13	20916Z	1	Bracket, prop rod	
14	10000017445	1	Foam, rear door - bottom	
15	54732W	1	Panel, vent - rear door	
16	10000017444	1	Foam, rear door - back	
17	10000017428	1	Assembly, rear door	

DOOR ASSEMBLY - FRONT LEFT

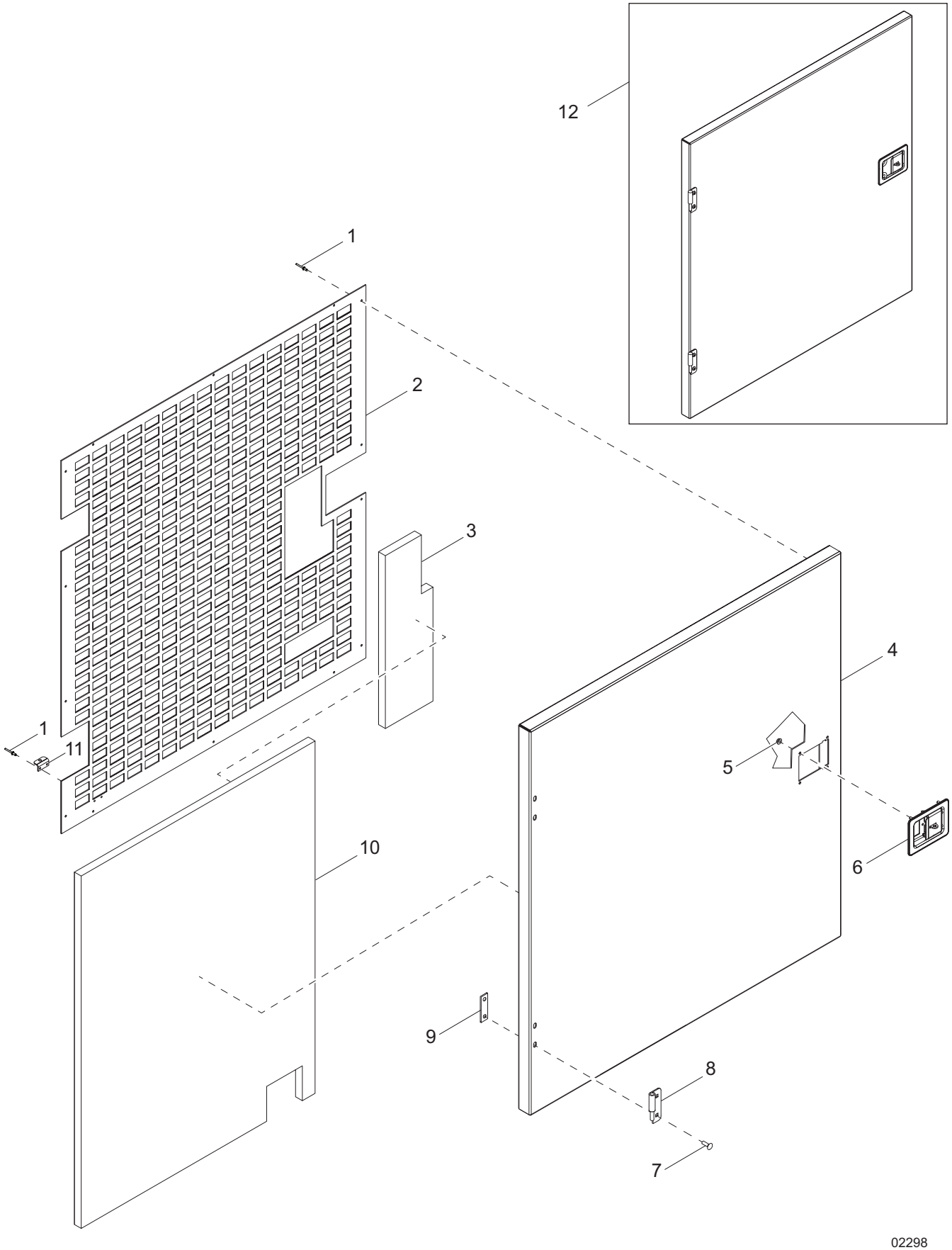

Item	Part No.	Qty	Description	Notes
1	60268	16	Rivet, .188 diameter x .126 to .250 grip - SS	
2	54327B	1	Panel, door - inside	
3	10000020018	1	Foam	
4	54901W	1	Panel, front driver side door	
5	60036	4	Nut, M6-1.00 serrated flange, G8.8	
6	54777	1	Latch, paddle slam - black	
7	63346	4	Screw, .312-18 x 1.0 Scytrx - SS	
8	18459B	2	Hinge, right (male)	
9	36672ZC	2	Plate, hinge back - threaded	
10	10000017448	1	Foam	
11	20916Z	1	Bracket, prop rod	
12	10000017490	1	Assembly, front door - left	

DOOR ASSEMBLY - FRONT RIGHT

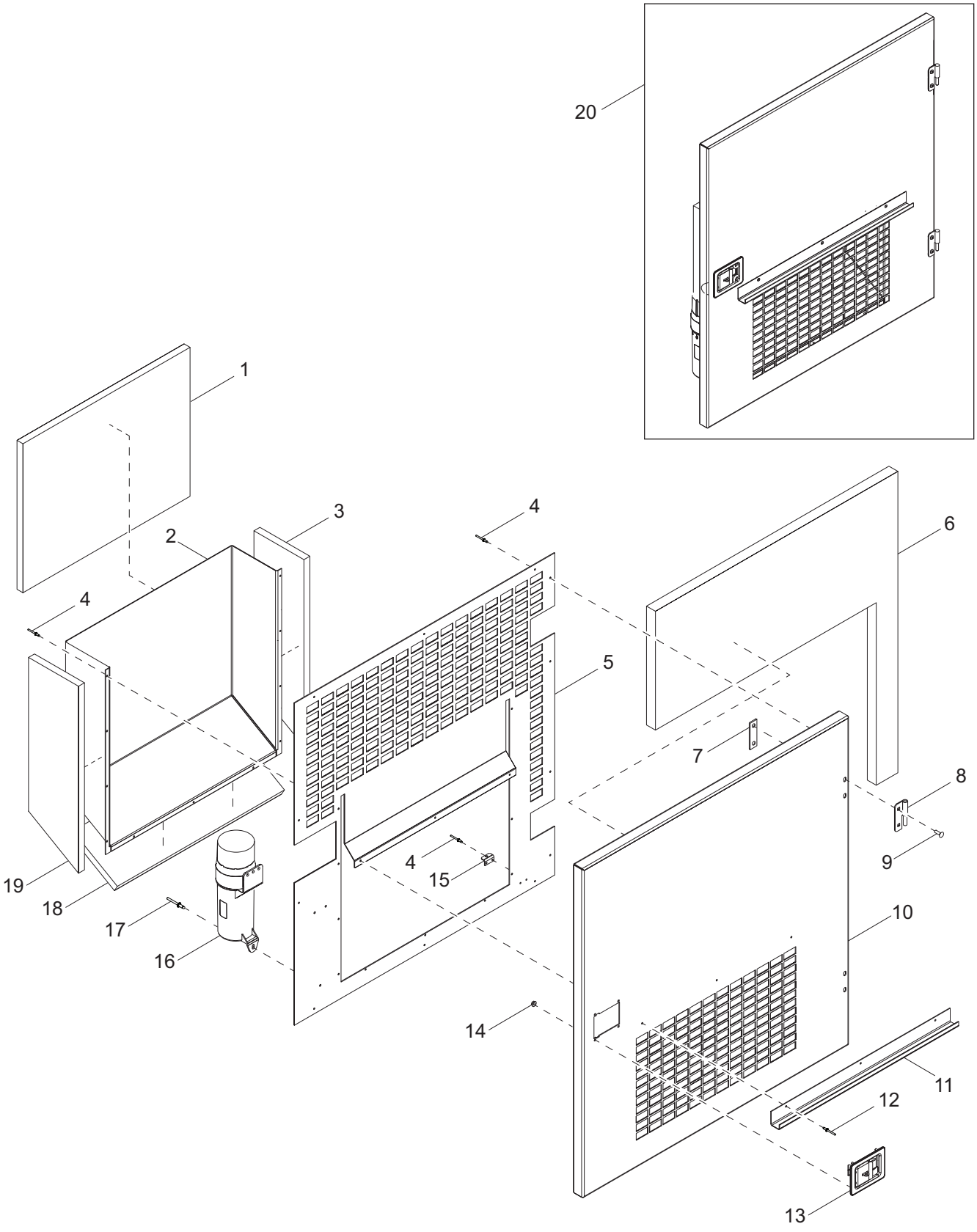

Item	Part No.	Qty	Description	Notes
1	10000017459	1	Foam, vent panel right hand door	
2	54734W	1	Vent, side door	
3	10000017427	1	Foam, vent panel right hand door - side cut	
4	60268	25	Rivet, .188 diameter x .126 to .250 grip - SS	
5	54186B	1	Panel, inner door	
6	10000017458	1	Foam, right hand door	
7	36672ZC	2	Plate, hinge back - threaded	
8	18461B	2	Hinge, left - male	
9	63346	4	Screw, .312-18 x 1.0 Scytrx - SS	
10	54900W	1	Panel, front curbside door	
11	54769W	1	Gutter, side door	
12	60260	3	Rivet, .188 diameter x .312 to .500 grip - SS	
13	54777	1	Latch, paddle slam - black	
14	60036	4	Nut, M6-1.00 serrated flange, G8.8	
15	20916Z	1	Bracket, prop rod	
16	36988	1	Manual holder, 4.00 diameter - black	
17	32221	3	Rivet, .250 diameter x .251 to .375 grip - aluminum	
18	10000017501	1	Foam, vent panel right hand door - bottom	
19	10000017491	1	Foam, vent panel right hand door - side	
20	10000017475	1	Assembly, front door - right	

FUEL PANEL ASSEMBLY

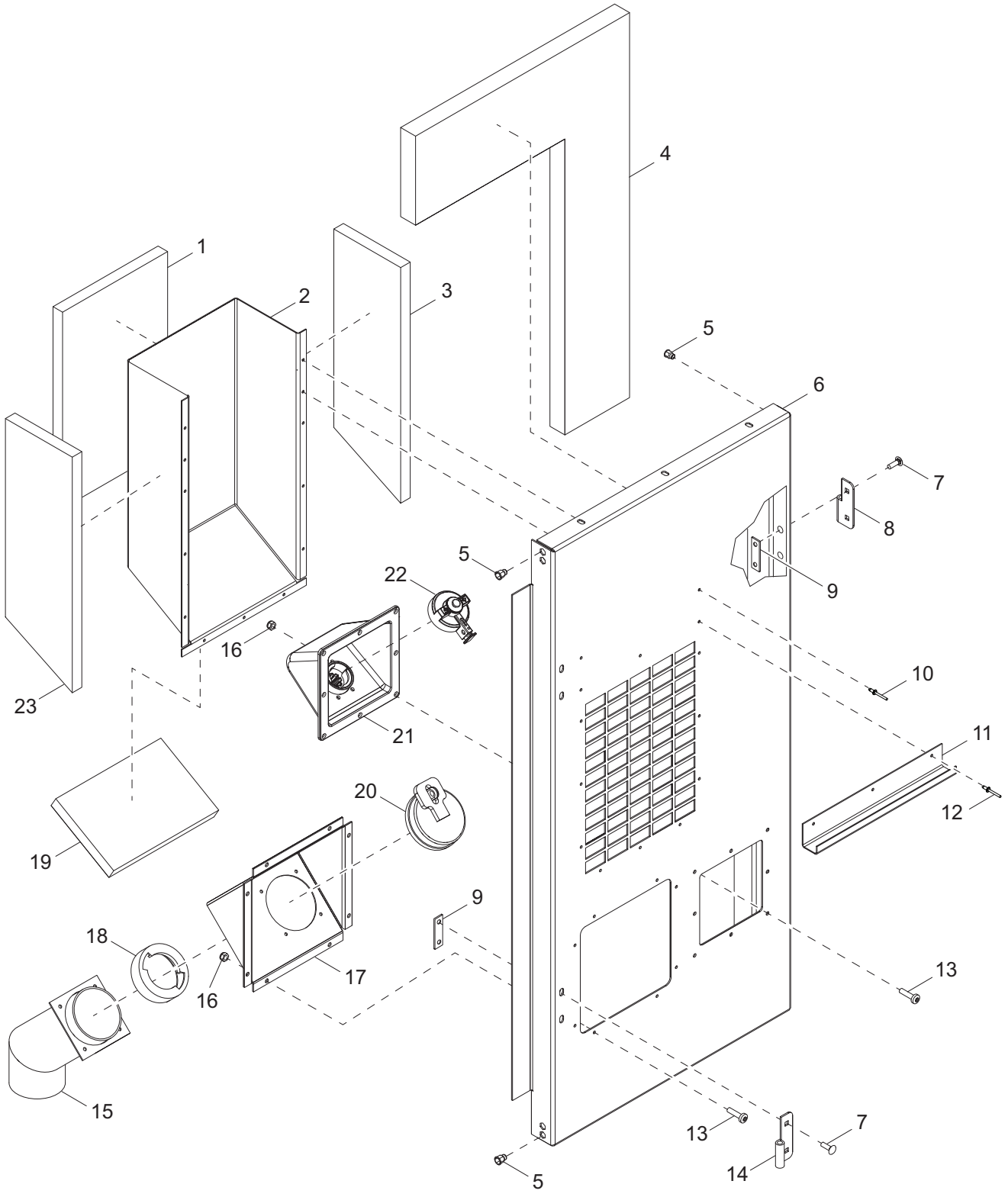

Item	Part No.	Qty	Description	Notes
1	10000017444	1	Foam, rear door - back	
2	54732W	1	Panel, vent rear door	
3	10000017436	1	Foam, rear door - left	
4	10000017456	1	Foam, fuel door	
5	63097	8	Insert, threaded .313-18 hex .027-.150 grip	
6	53414W	1	Panel, rear left hand	
7	63346	8	Screw, .312-18 x 1.0 Scytrx - SS	
8	18462B	2	Hinge, right - female	
9	10000011935	4	Plate, hinge back - threaded	
10	60268	11	Rivet, .188 diameter x .126 to .250 grip - SS	
11	54768W	1	Gutter, rear door	
12	61226	2	Rivet, .188 diameter x .250 to .375 grip - AL	
13	60540	20	Screw, 10-24 x .750 pan Phillips - SS	
14	18460B	2	Hinge, left - female	
15	23710B	1	Weldment, 3.50 fuel fill neck	
16	60530	20	Nut, 10-24 nylock - SS	
17	23697B	1	Panel, fuel inlet	
18	23830	1	Insert, plastic fuel	
19	10000017445	1	Foam, rear door - bottom	
20	55104	1	Cap, fuel fill 3.50 - green	
21	54007	1	Assembly, fluid guard	
22	54005	1	Cap, DEF fill	
23	10000017437	1	Foam, rear door - right	

RECEPTACLE / E-STOP PANEL ASSEMBLY

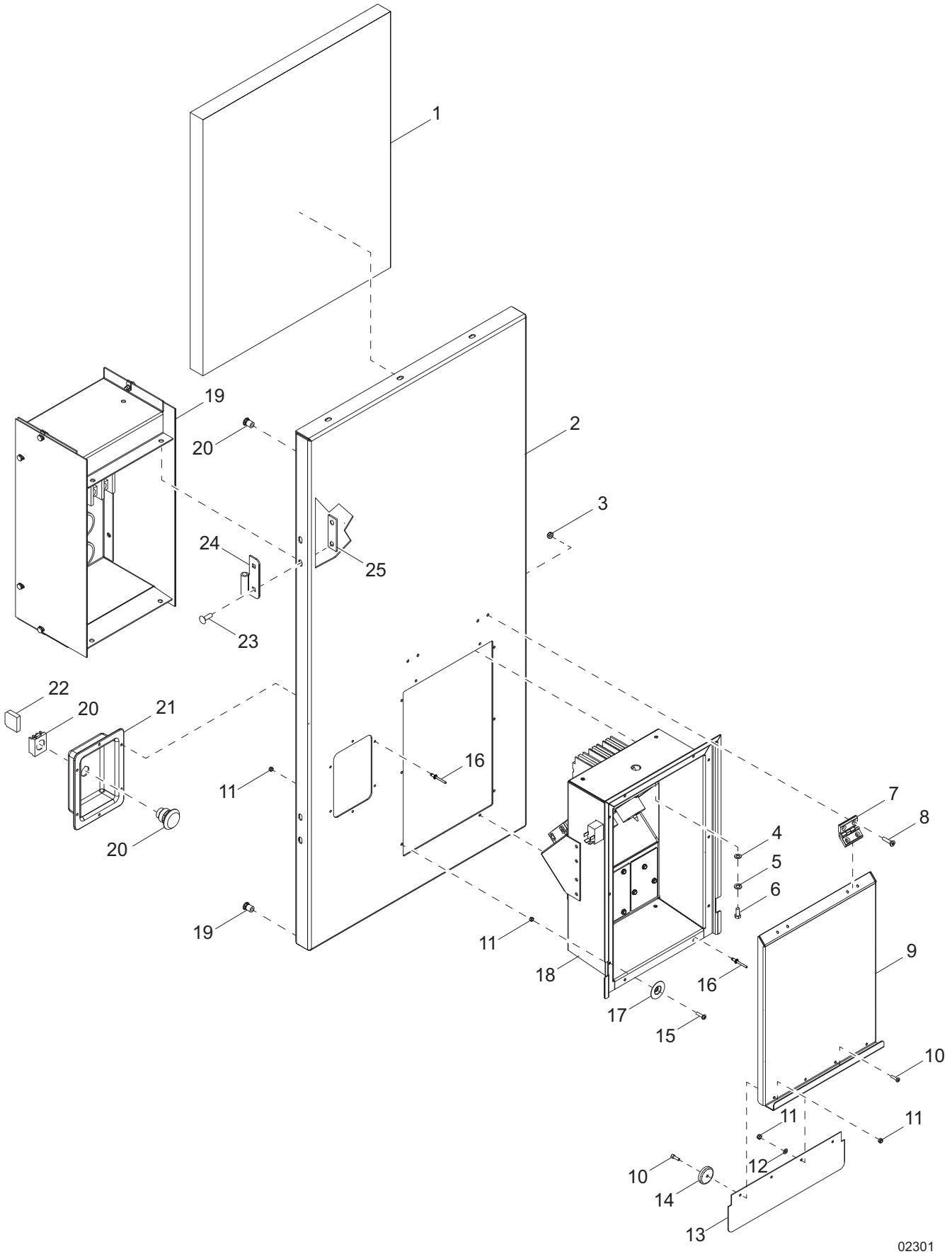

Item	Part No.	Qty	Description	Notes
1	10000017479	1	Foam, receptacle/E-stop	
2	53980W	1	Panel, receptacle/E-stop	
3	60530	8	Nut, 10-24 nylock, SS	
4	60243	4	Washer, .250 flat .735/.060	
5	60286	4	Washer, .250 split lock	
6	60281	4	Screw, .250-20 x .750 standard hex, G5	
7	54135	4	Screw, 10-24 x .500 flat head Phillips - SS	
8	35394	2	Hinge, door - small	
9	35290	4	Screw, 10-24 x 1.00 flat head Phillips - SS	
10	51719W	1	Door, receptacle box	
11	60277	4	Screw, 10-32 x .500 pan Phillips - SS	
12	60061	8	Nut, 10-32 nylock	
13	60269	2	Washer, #8 flat .433/.036	
14	51721	1	Flap, receptacle door - rubber	
15	51725	2	Cup, magnet 1-15/64 diameter -14# pull	
16	61180	2	Screw, 10-32 x .750 pan Phillips - SS	
17	60260	14	Rivet, .188 diameter x .375 to .500 grip - SS	
18	62140	2	Washer, cup #10 1.50/.03	
19	54990	1	Assembly, receptacle/breaker box	
20	63231	4	Insert, threaded .250-20 hex .027-.165 grip	
21	65470	1	Switch, E-stop operator	
22	30645	1	Panel, emergency stop	
23	65580	1	Block, E-stop contactor	
24	63346	4	Screw, .312-18 x 1.00 Scytrx sq - SS	
25	18460B	2	Hinge, left (male)	
26	10000011935	2	Plate, hinge back - threaded	
27	22550SRV	1	Assembly, e-stop	Items 21-23
28	10000017520	1	Assembly, receptacle / e-stop panel	

RECEPTACLE PANEL ASSEMBLY

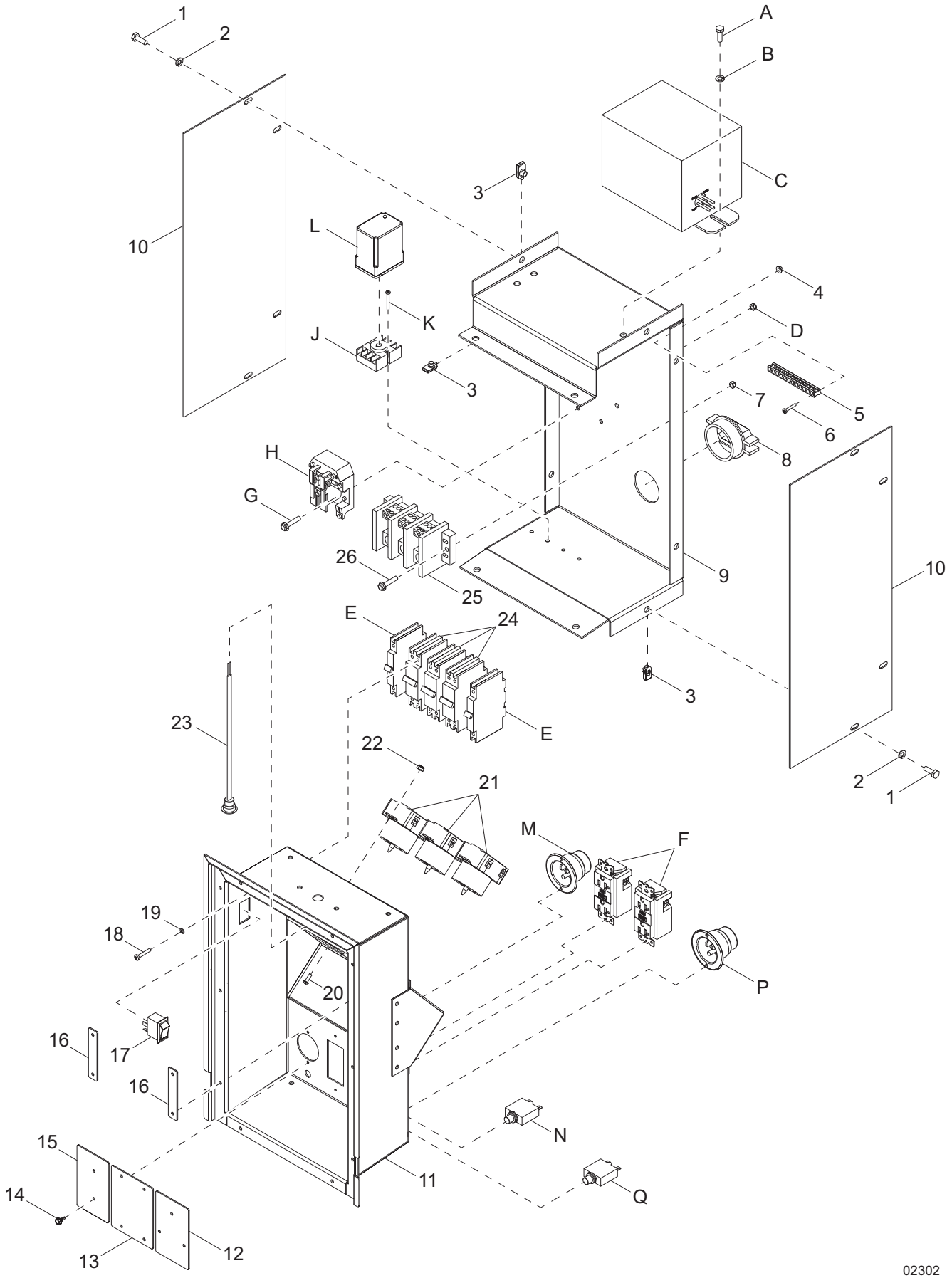

Item	Part No.	Qty	Description	Notes
1	60281	12	Screw, .250-20 x .750 hex, G5	
2	60286	12	Washer, .250 split lock	
3	61143	12	Nut, .250-20 u-clip, short type	
4	61045	2	Nut, 10-32 serrated flange	
5	14204	1	Kit, ground bar	
6	60397	2	Screw, 10-32 x 1.00 pan Phillips, G2	
7	60036	2	Nut, M6-1.00 serrated flange hex, G8.8	
8	65788	1	Strain relief, 2.0 Romex w/nut	
9	54991B	1	Box, back receptacle	
10	51715B	2	Panel, back receptacle	
11	54989B	1	Box, receptacle/breaker/outlet LED	
12	10000009636	1	Cover, block heater receptacle	
13	10000009672	1	Cover, buck transformer receptacle	
14	60364	9	Screw, 10-16 x .500 hex, G2 - self drilling	
15	10000009645	1	Cover, battery charger receptacle	
16	10000009680	2	Cover, 20A breaker	
17	66995	1	Switch, rocker - DPST, on-off	
18	60046	16	Screw, 6-32 x .750 pan Phillips, G2	
19	60058	16	Washer, #6 split lock	
20	62054	6	Screw, 8-32 x .500 pan Phillips, SS	
21	18089	3	Receptacle, 240V/50A twist lock	
22	60270	6	Nut, 8-32 nylock, G6	
23	39651	1	Light, controls	
24	18092	3	Breaker, 50A, 240V - 2 pole	
25	65356	1	Block, terminal - 3 pole	
26	60024	2	Screw, M6-1.00 x 25 serrated flange hex	
Buck Transformer w/Receptacles (if equipped):				
A	60281	2	Screw, .250-20 x .750 hex, G5	
B	60286	2	Washer, .250 split lock	
C	21487	1	Transformer, 1.13:1, 1-phase, 500VA	
D	60036	2	Nut, M6-1.00 serrated flange hex, G8.8	
E	18091	2	Breaker, 20A, 240V - 1 pole	
F	14130	2	Receptacle, 120V/20A GFI	
G	60024	2	Screw, M6-1.00 x 25 serrated flange hex	
H	65461	1	Relay, 30A DPDT - 120VAC	
J	65644	1	Base, relay - 8 position	
K	60288	4	Screw, 6-32 x 1.250 pan Phillips, G2	
L	66340	1	Relay, voltage sensing (132 in - 126 out)	
Battery Charger (if equipped):				
M	65285	1	Receptacle, 125V/15A inlet	
N	15568	1	Breaker, 15A 120V - 1 pole, push button	
Block Heater (if equipped):				
P	68635	1	Receptacle, 125V/30A inlet	
Q	14432	1	Breaker, 30A 120V - 1 pole, push button	

CONTROL PANEL DOOR ASSEMBLY

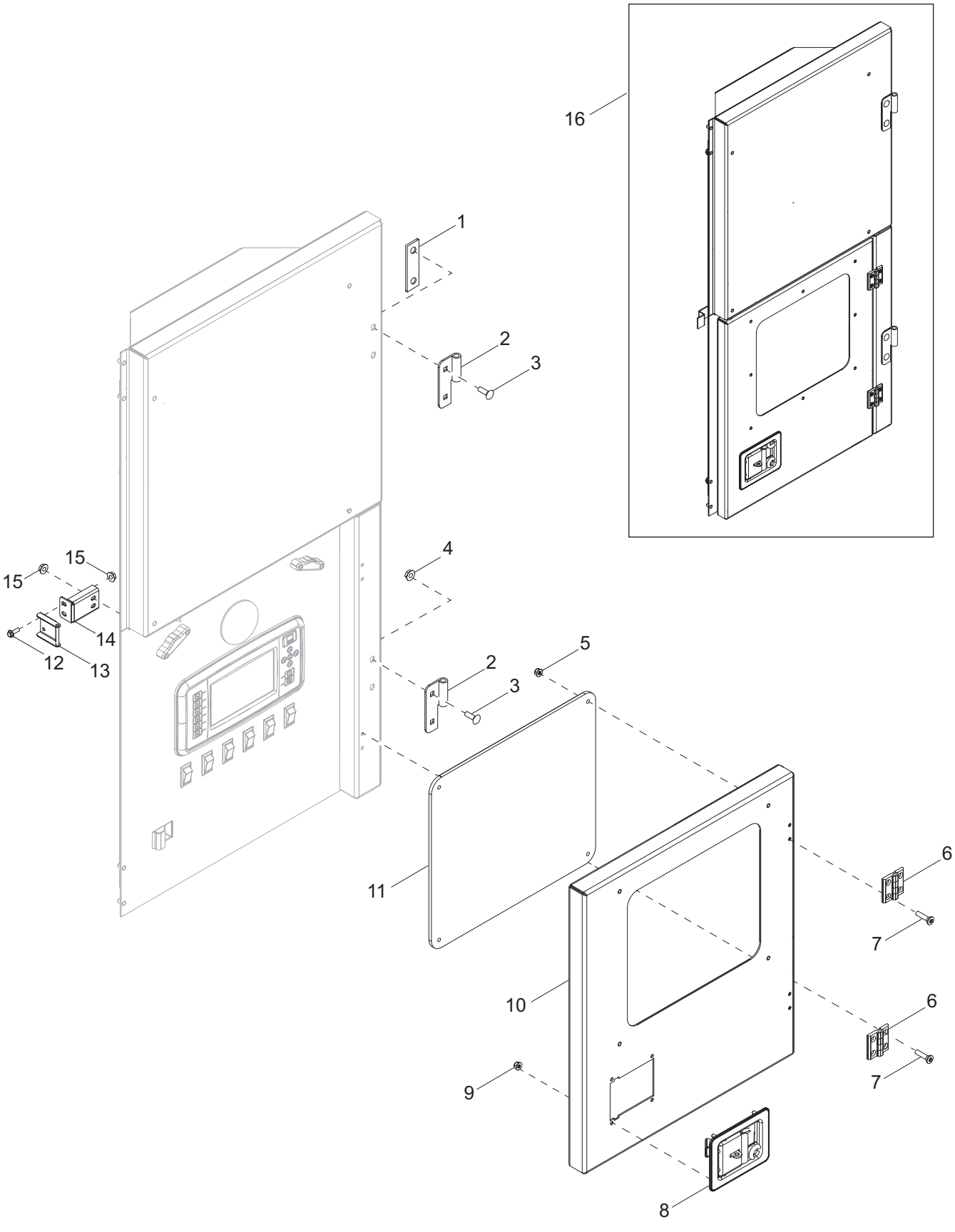

Item	Part No.	Qty	Description	Notes
1	10000011935	1	Plate, hinge back - threaded	
2	18460B	2	Hinge, left (female)	
3	63346	4	Screw, .312-18 x 1.00 Scytrx - SS	
4	60095	4	Nut, .312-18 serrated flange hex	
5	63075	8	Nut, .250-20 flange nylock, G5	
6	35394	2	Hinge, door - small	
7	54135	8	Screw, 10-24 x .500 flat head Phillips - SS	
8	54777	1	Latch, paddle slam - black	
9	60036	4	Nut, M6-100 serrated flange hex, G8.8	
10	55028W	1	Door, controls - small	
11	54387	1	Window, rear display	
12	60175	2	Screw, .250-20 x .500 serrated flange hex, G5	
13	10000013494	1	Weldment, striker	
14	10000014172	1	Mount, door striker	
15	60161	2	Nut, .250-20 serrated flange, G5	
16	10000017497	1	Assembly, control panel door	

CONTROL PANEL ASSEMBLY (2 OF 2)

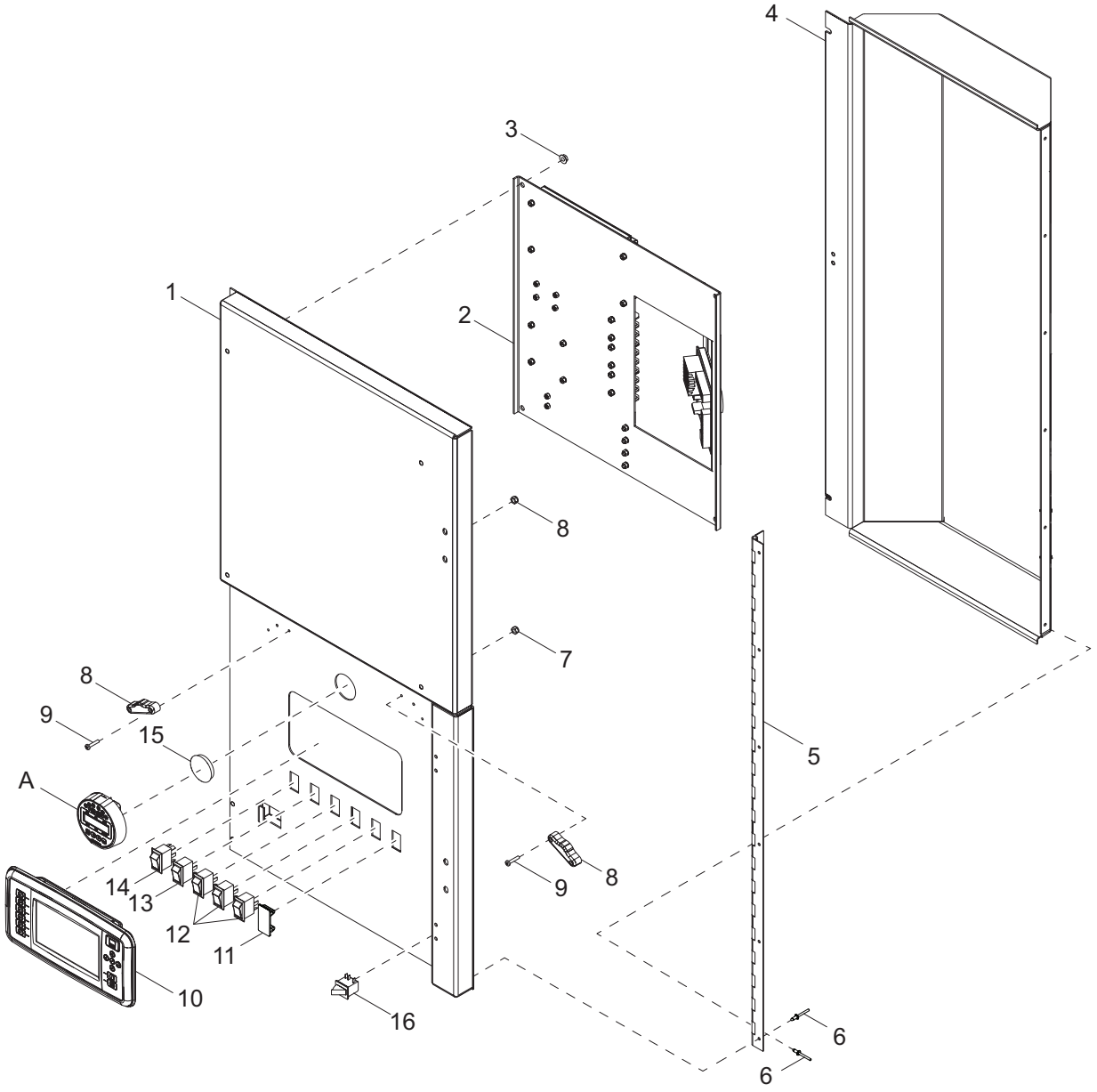

Item	Part No.	Qty	Description	Notes
1	55053W	1	Door, main controls	
2	55031	1	Assembly, control panel - sub	
3	60095	6	Nut, .312-18 serrated flange hex	
4	55026W	1	Door, rear control door	
5	11095	1	Hinge, continuous - 43.00	
6	60268	12	Rivet, .188 diameter x .126 to .250 grip - SS	
7	60270	4	Nut, 8-32 nylock, G6	
8	10000017915	2	Assembly, LED lighting	
9	60695	4	Screw, 8-32 x 1.00 pan Phillips - SS	
10	33157	1	Display, 7” DSE	
11	34439	1	Plug, panel switch	
12	66995	4	Switch, rocker - DPST, on-off	
13	66996	1	Switch, rocker - DPDT, on-off/(on)	
14	68530	1	Switch, rocker - DPST, on-on	
15	32956	1	Plug, hole 2.00 press in - nylon	
16	65830	1	Switch, trigger safety	
Paralleling (if equipped):				
A	55103	1	Display and control, DEF	w/paralleling only

CONTROL PANEL ASSEMBLY (1 OF 2)

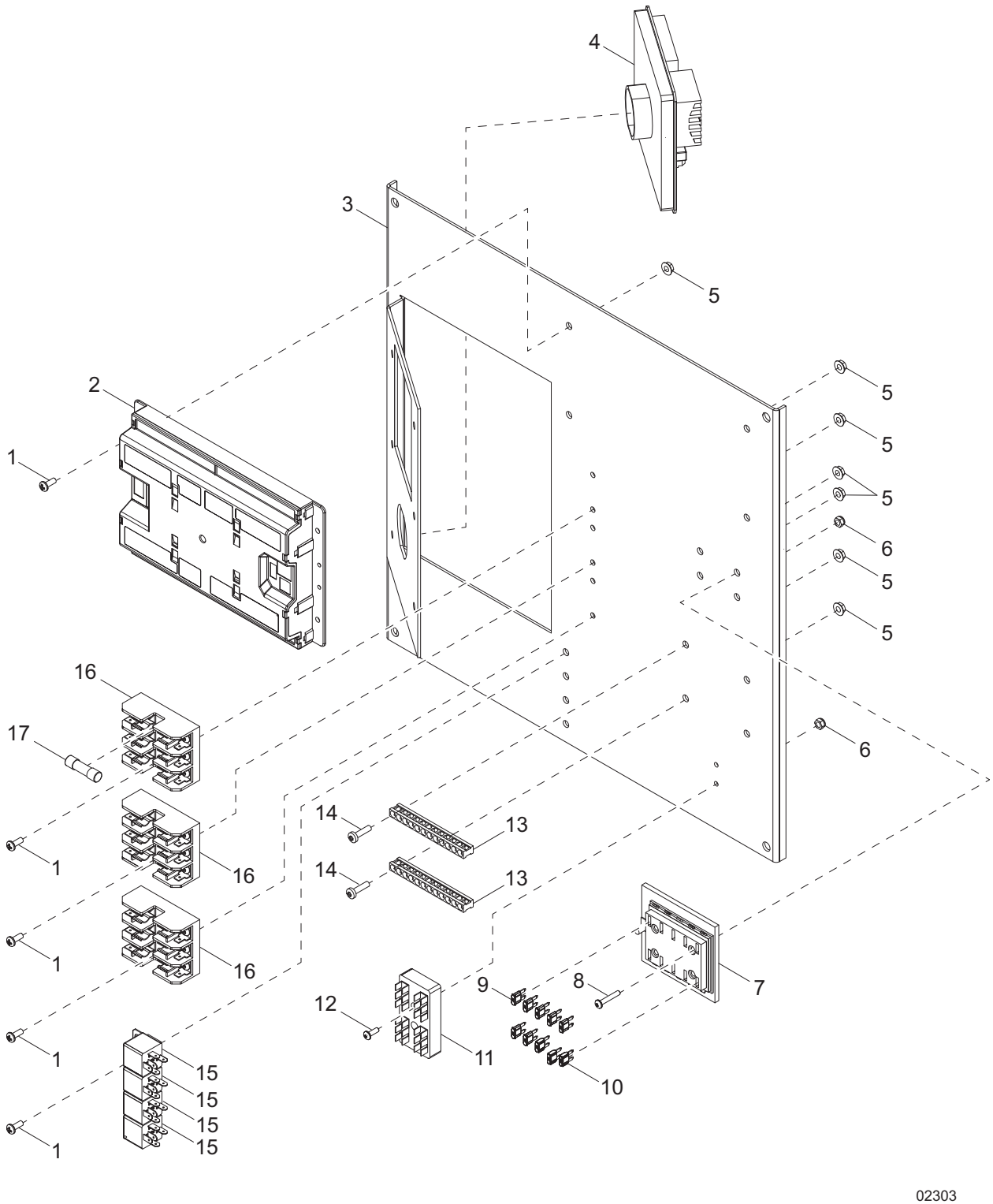

Item	Part No.	Qty	Description	Notes
1	60277	14	Screw, 10-32 x .500 pan Phillips, G2	
2	Contact Us*	1	Controller, Deep Sea 7740	See Note below
3	10000011770	1	Controls, sub plate	
4	68015	1	Regulator, voltage	
5	61045	18	Nut, 10-32 serrated flange	
6	62068	6	Nut, 8-32 nylock - SS	
7	10000007847	1	Fuse block, 10 position	
8	54150	4	Screw, 8-32 x 1.00 pan Phillips	
9	35560	7	Fuse, 20A	
10	68204	3	Fuse, 15A	
11	66992	1	Terminal block, 4 x 6 push-on	
12	62054	2	Screw, 8-32 x .500 pan Phillips - SS	
13	14204	2	Kit, ground bar	
14	60062	4	Screw, 10-32 x .750 pan Phillips, G2	
15	65049	4	Relay, 12V 30/40A N.O. w/diode	
16	0D2572	3	Fuse block, 30A 600V - 3 position w/sq	
17	073590A	9	Fuse, 5A	

Note: ** To order replacement controller, contact Generac Mobile Products with unit serial number*

BREAKER/LUG BOX ASSEMBLY

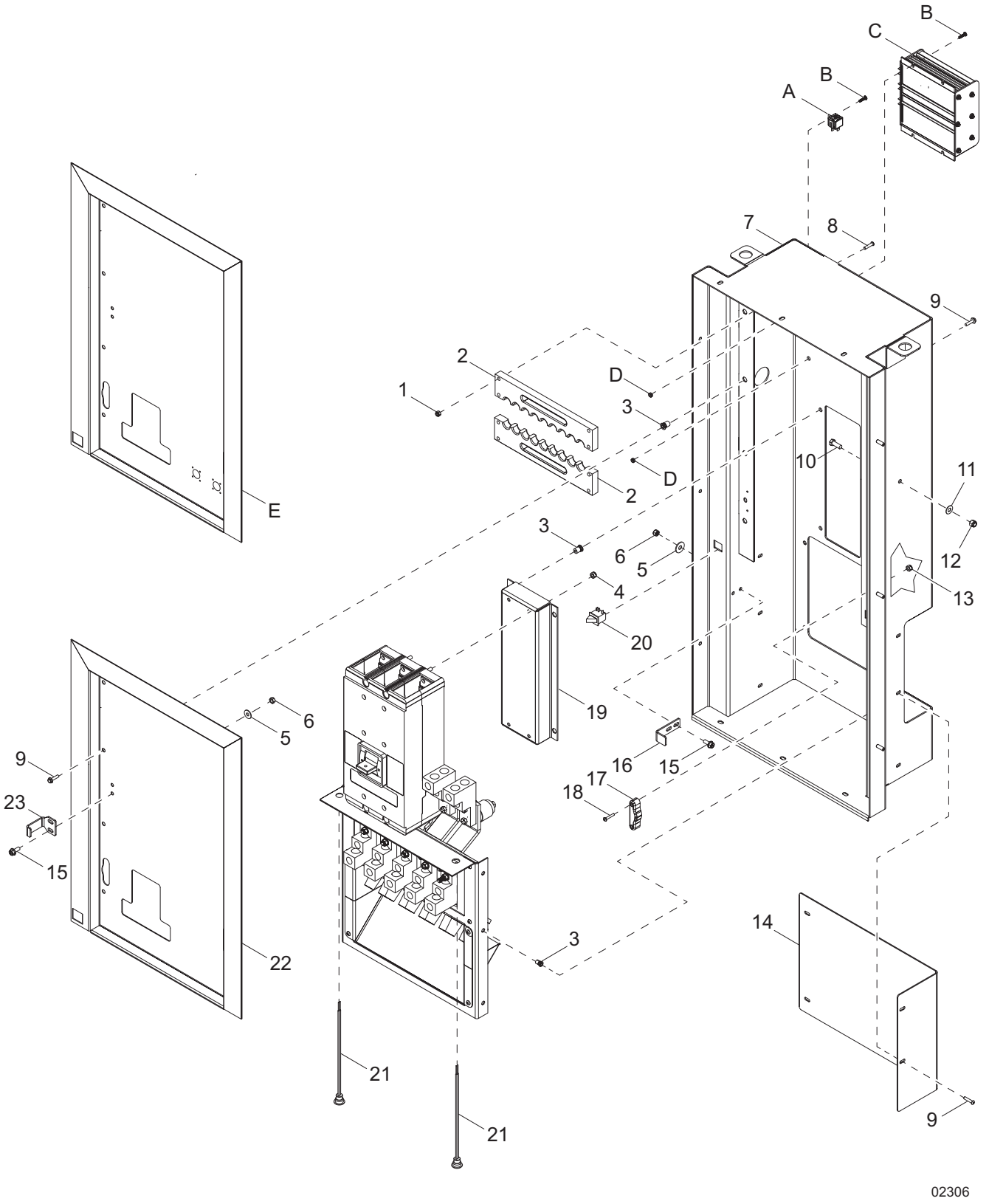

Item	Part No.	Qty	Description	Notes
1	60144	8	Nut, .250-20 nylock, G5	
2	56346	2	Plate, cable support	
3	63097	14	Insert, threaded .312-18 hex .027-.150 grip	
4	60303	4	Nut, .312-18 nylock, G2	
5	60340	4	Washer, .312 flat .875/.040	
6	60784	4	Nut, .312-18 nylock - SS	
7	54030W	1	Weldment, AC power box	
8	68070	8	Screw, .250-20 x 1.00 button hex - SS	
9	61091	14	Screw, .312-18 x 1.00 serrated flange hex, G5	
10	60690	1	Screw, .375-16 x 1.00 standard hex - SS	
11	60698	1	Washer, .375 flat .875/.040 - SS	
12	60792	1	Nut, .375-16 nylock - SS	
13	60270	4	Nut, 8-32 nylock, G6	
14	56363W	1	Plate, rear control box	
15	60616	4	Screw, .312-18 x .750 serrated flange hex, G5	
16	55021W	1	Striker, lug door	
17	10000017915	2	Assembly, LED light	
18	60695	4	Screw, 8-32 x 1.00 pan Phillips - SS	
19	54976W	1	Mount, breaker	
20	12632	1	Switch, trigger safety, N.O.	
21	39651	2	Light, controls	
22	51744W	1	Panel, AC distribution	
23	55022W	1	Striker, breaker door	
Parallel Kit (if equipped):				
A	67028	2	Relay, 24V 30/40A N.O. w/diode	
B	60850	6	Screw, 10-24 x .750 pan Phillips, G2	
C	10000009022	1	Converter, DC - DC 12V-24V	
D	60457	6	Nut, 10-24 nylock, G2	
E	54899W	1	Panel, AC distribution - paralleling	

BREAKER AND LUG ASSEMBLY

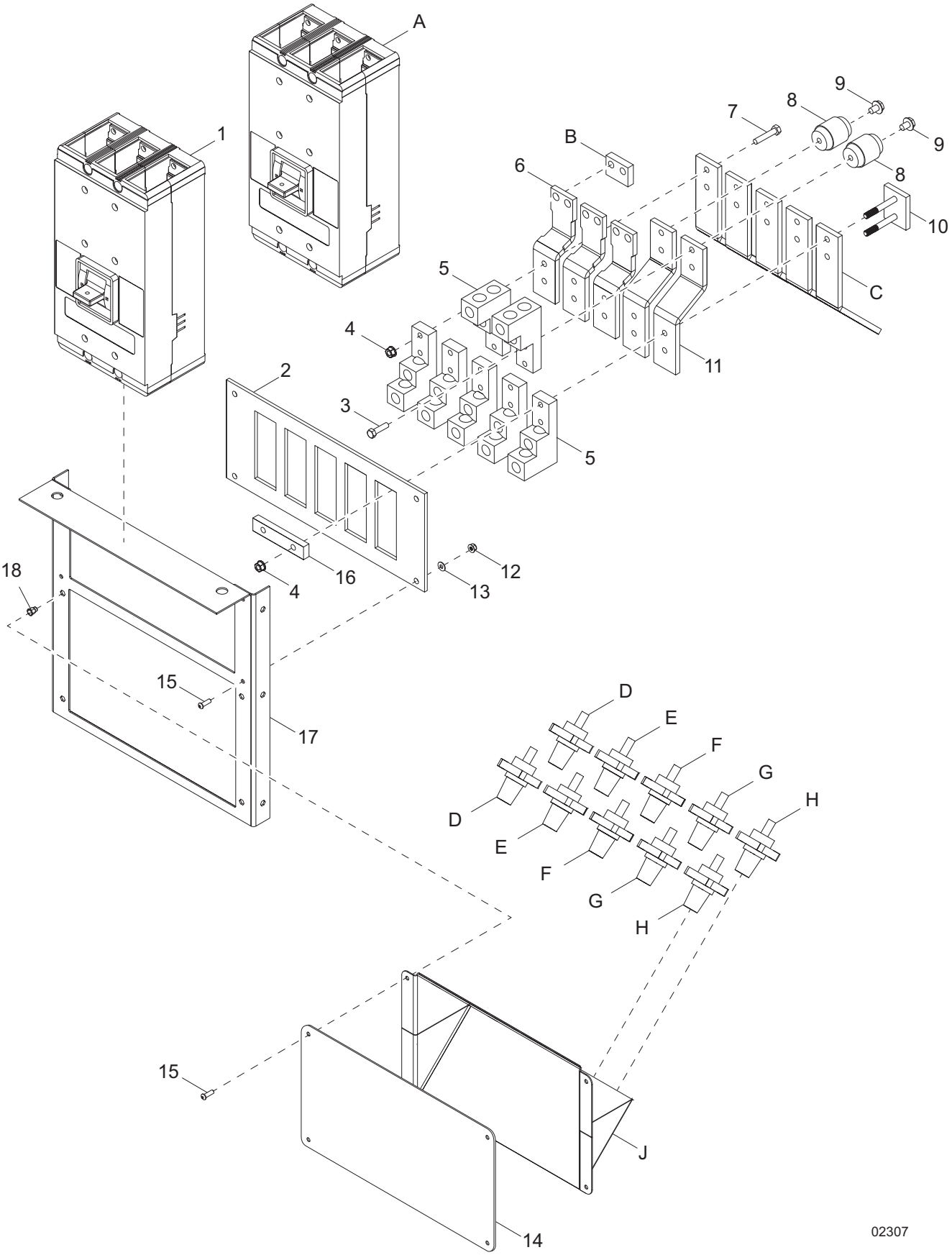

Item	Part No.	Qty	Description	Notes
1	65354	1	Breaker, 700A 3 pole, 12-24V	
2	54959	1	Panel, AC box	
3	60139	4	Screw, .375-16 x 1.50 standard hex, G5	
4	60145	12	Nut, .375-16 serrated flange, G5	
5	65890	7	Lug, terminal dual #6-35MCM - 2 hole	
6	54958	3	Bus bar, breaker to lug	
7	60478	6	Screw, .375-16 x 2.00 standard hex, G5	
8	69604	2	Insulator, standoff -2700V	
9	62049	2	Screw, .375-16 x .500 serrated flange hex - SS	
10	56362	2	Assembly, bolt plate	
11	54957	2	Bus bar, ground - neutral	
12	60144	4	Nut, .250-20 nylock, G5	
13	60696	4	Washer, .250 flat .625/.050 - SS	
14	54955W	1	Plate, AC distribution - no cam	
15	68070	8	Screw, .250-20 x 2.00 button hex - SS	
16	56361	1	Bus bar	
17	54946W	1	Bracket, cam lock - 2 row	
18	63097	4	Insert, threaded .312-18 hex .027-.150 grip	
Paralleling Kit (if equipped):				
A	55108	1	Breaker, motorized 500A - 100% RTD	
B	54997	3	Bus bar, spacer - parallel	
Cam Locks (if equipped):				
C	54956	5	Bus bar, cam locks	
D	65551	2	Connector, cam lock, female 400A - black	
E	65552	2	Connector, cam lock, female 400A - red	
F	65553	2	Connector, cam lock, female 400A - blue	
G	65554	2	Connector, cam lock, male 400A - white	
H	65555	2	Connector, cam lock, male 400A - green	
J	54945W	1	Panel, cam lock - 2 row	

AIR FILTER ASSEMBLY

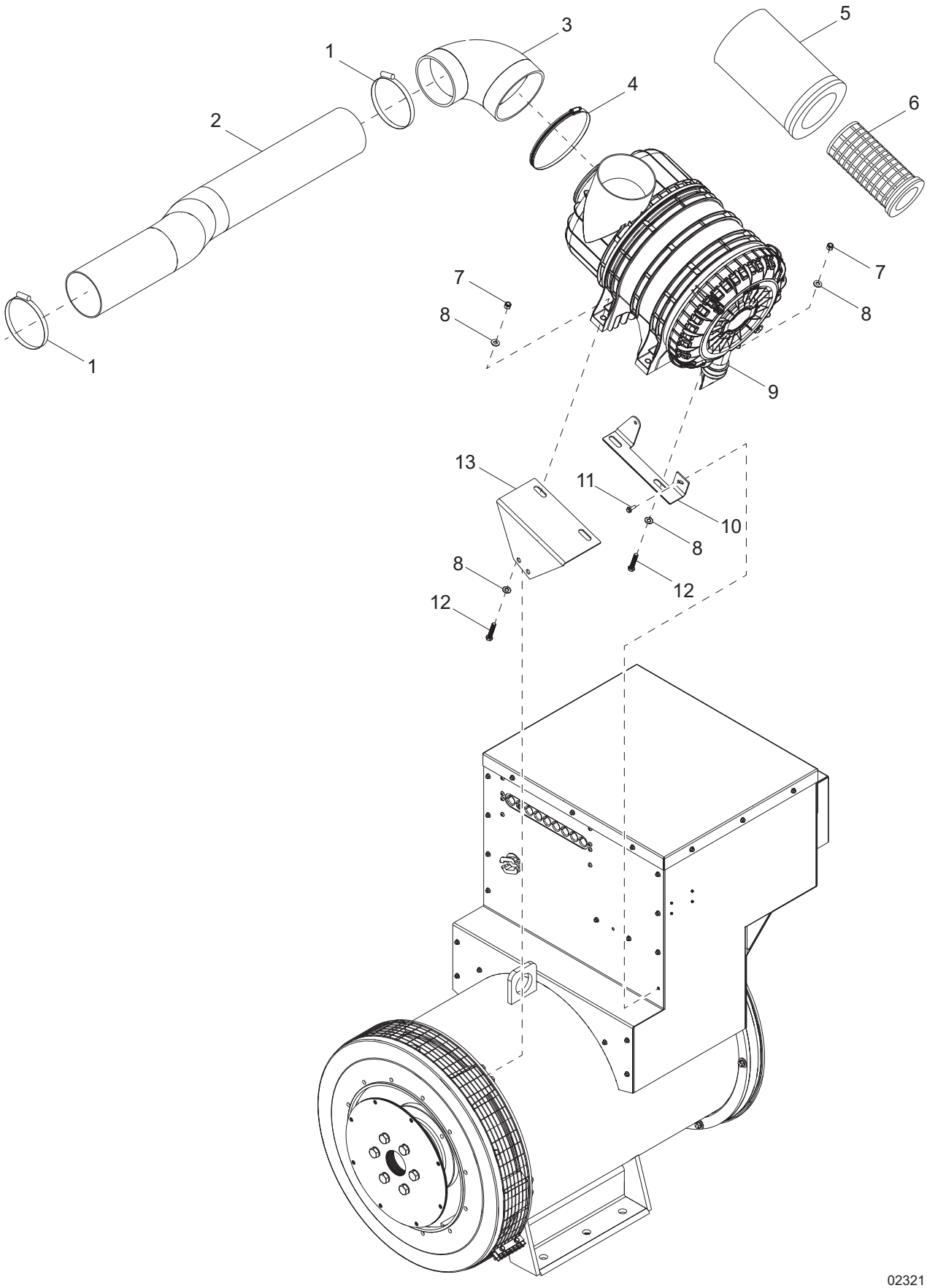

Item	Part No.	Qty	Description	Notes
1	20182	2	Clamp, hose SAE088 (4.09-6.00)	
2	10000008016	1	Pipe, air intake	
3	54849	1	Elbow, 90 degree 6.0-5.0 - rubber	
4	21712	1	Clamp, hose SAE116 (5.75-7.75)	
5	10000012604	1	Filter, primary element	
6	10000012613	1	Filter, secondary element	
7	60358	4	Nut, .375-16 nylock, G5	
8	60151	8	Washer, .375 flat .810/.060	
9	54881	1	Filter, air	w/elements
10	10000012329	1	Bracket, air intake	
11	60107	2	Screw, .250-20 x .750 serrated flange hex, G5	
12	60478	4	Screw,	
13	10000012373	1	Bracket, air intake	

COOLING SYSTEM ASSEMBLY

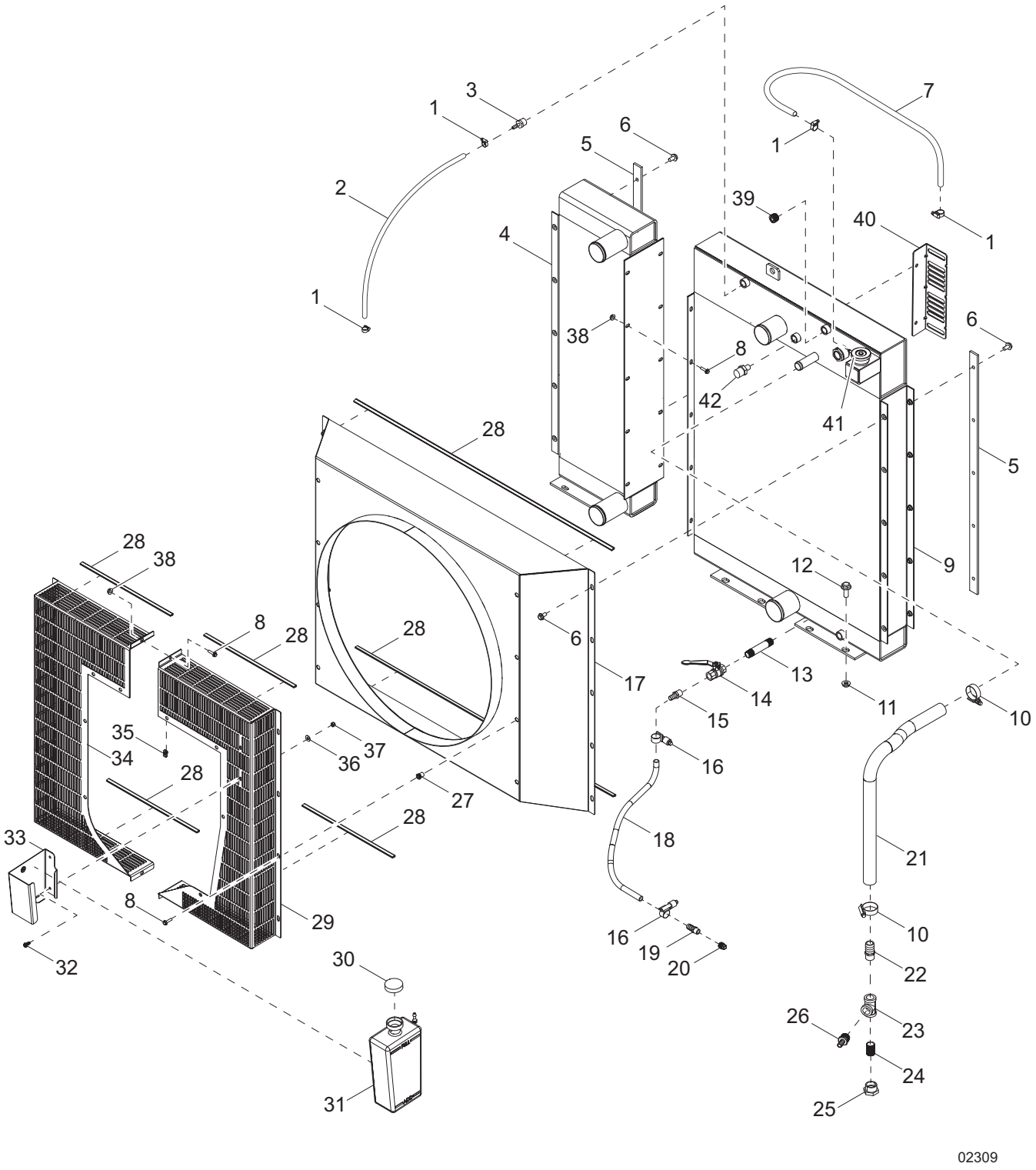

Item	Part No.	Qty	Description	Notes
1	19453	4	Clamp, hose SAE006 (.37-.87)	
2	50018	1.5 ft	Hose, .312 ID 50 PSI SAE 30R7	
3	60999	1	Fitting, straight .500MNPT x .312 barb - brass	
4	55125	1	Assembly, CAC	
5	10000008522	2	Spacer, insulation	
6	60487	11	Screw, .375-16 x 1.50 serrated flange hex, G5	
7	50018	1 ft	Hose, radiator overflow	
8	61091	20	Screw, .312-18 x 1.00 serrated flange hex, G5	
9	55124	1	Radiator assembly	
10	15422	2	Clamp, hose SAE020 (.75-1.75)	
11	60098	6	Nut, .500-13 serrated flange hex	
12	61100	6	Screw, .500-13 x 1.00 serrated flange hex, G5	
13	40738	1	Fitting, nipple .500MNPT x 4.00	
14	19279	1	Valve ball, .500NPTF	
15	60502	1	Fitting, straight.500MNPT x .625 barb - brass	
16	60365	2	Clamp, hose SAE010 (.56-1.06)	
17	10000008332	1	Weldment, tapered fan shroud	
18	54979	2.5 ft	Hose, radiator drain - 29.00 inch	
19	25931	1	Fitting, straight .375NPT x .625 barb	
20	42683	1	Plug, .375 CL150 - square head	
21	50169	2.5 ft	Hose, 1.00 inch	
22	25496	1	Fitting, straight .750MNPT x 1.00 barb - brass	
23	61044	1	Fitting, tee .750NPT - brass	
24	62027	1	Fitting, nipple .750NPT x close - brass	
25	HW4046A126	1	Fitting, M30-2.0 male x .750FNPT	
26	40667	1	Fitting, straight .750MNPT x .500 barb - brass	
27	63097	8	Insert, threaded .313-18 hex .027-.150 grip	
28	19351	6 ft.	Seal, u-channel	
29	10000008482	1	Guard, fan - curbside	
30	19714	1	Cap, overflow bottle	
31	24952	1	Jug, overflow 2.5 quart	
32	63358	2	Screw, .250-20 x .625 hex washer head	
33	26211B	1	Bracket, overflow jug	
34	10000008503	1	Guard, fan - roadside	
35	61143	8	Nut, .250-20 u-clip - short type	
36	60243	2	Washer, .250 flat .735/.060	
37	60144	2	Nut, .250-20 nylock, G5	
38	60095	12	Nut, .312-18 serrated flange	
39	55008	2	Plug, .500 NPT hex	
40	10000007559	1	Bracket, DEF line support	
41	39850	1	Cap, radiator	
42	68206	1	Sensor, low coolant	

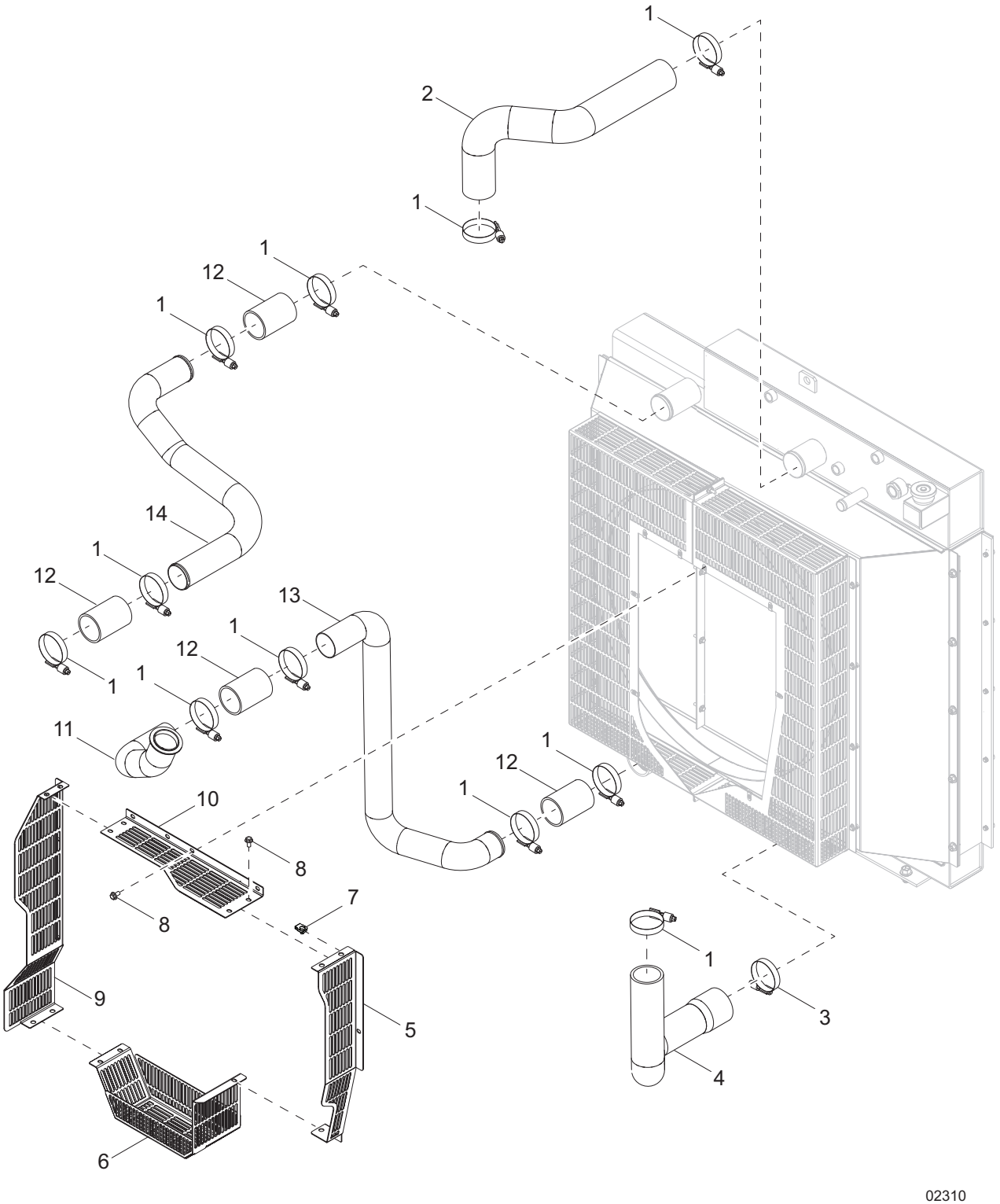
1
2
1
1
12
1
14
1
12
1
13
1
12
1
1
11
1
12
1
10
8
8
7
9
5
6
1
3
4
02310

Item	Part No.	Qty	Description	Notes
1	60666	11	Clamp, hose - constant torque 2.25-3.125	
2	53627	1	Hose, radiator input	
3	60664	1	Clamp, hose - constant torque 2.75-3.625	
4	53628	1	Hose, radiator output	
5	10000008447	1	Belt guard, curbside	
6	10000008499	1	Belt guard, bottom	
7	62086	8	Nut, .312-18 u-clip short type	
8	62052	16	Screw, .312-18 x .500 serrated flange hex, G5	
9	10000008486	1	Belt guard, roadside	
10	10000008472	1	Belt guard, top	
11	54225	1	Assembly, CAC pipe - lower	
12	28541	4	Hose, CAC 2.50 x 4.00 long	
13	54224	1	Pipe, CAC - lower	
14	53630	1	Pipe, CAC - upper	

LIFT STRUCTURE

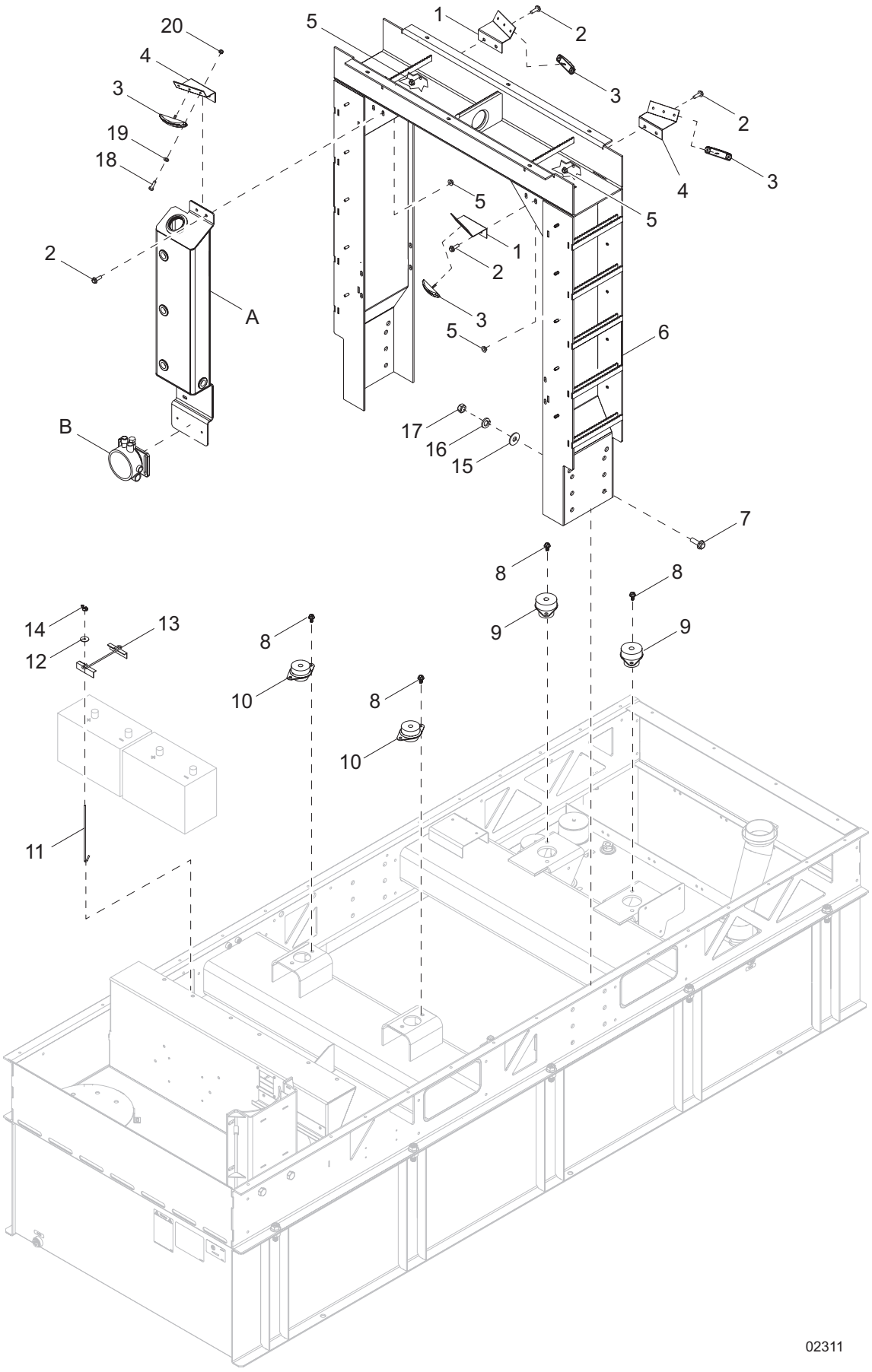

Item	Part No.	Qty	Description	Notes
1	55116B	2	Bracket, interior light - LH	
2	60295	8	Screw, .375-18 x .750 standard hex - SS	
3	54772	4	Light, LED surface mount	
4	55112B	2	Bracket, interior light - RH	
5	60145	8	Nut, .375-16 serrated flange, G5	
6	54933B	1	Weldment, lift structure	
7	61078	12	Screw, .625-11 x 2.00 flg hex, G8	
8	62259	8	Screw, M10-1.50 x 30 serrated flange hex, G10.9	
9	53377	2	Isolator, rubber 1500/1000	
10	52671	2	Isolator, rubber 680/1020	
11	14146	4	Bolt, J .250-20 x 10.00	
12	60089	4	Washer, .265 fender 1.250/.060	
13	14682	2	Bracket, battery hold-down	
14	60090	4	Nut, .250-20 wing, G5	
15	60521	12	Washer, .625 flat 1.743/.108	
16	60194	12	Washer, .625 lock	
17	60520	12	Nut, .625-11 hex, G8	
18	60397	8	Screw, 10-32 x 1.00 pan Phillips, G2	
19	60067	8	Washer, #10 flat .435/.060 - SS	
20	60061	8	Nut, 10-32 nylock	
Oil Tank (if equipped):				
A	26631	1	Gauge, oil sight w/level maintainer	
B	56386	1	Weldment, oil tank	

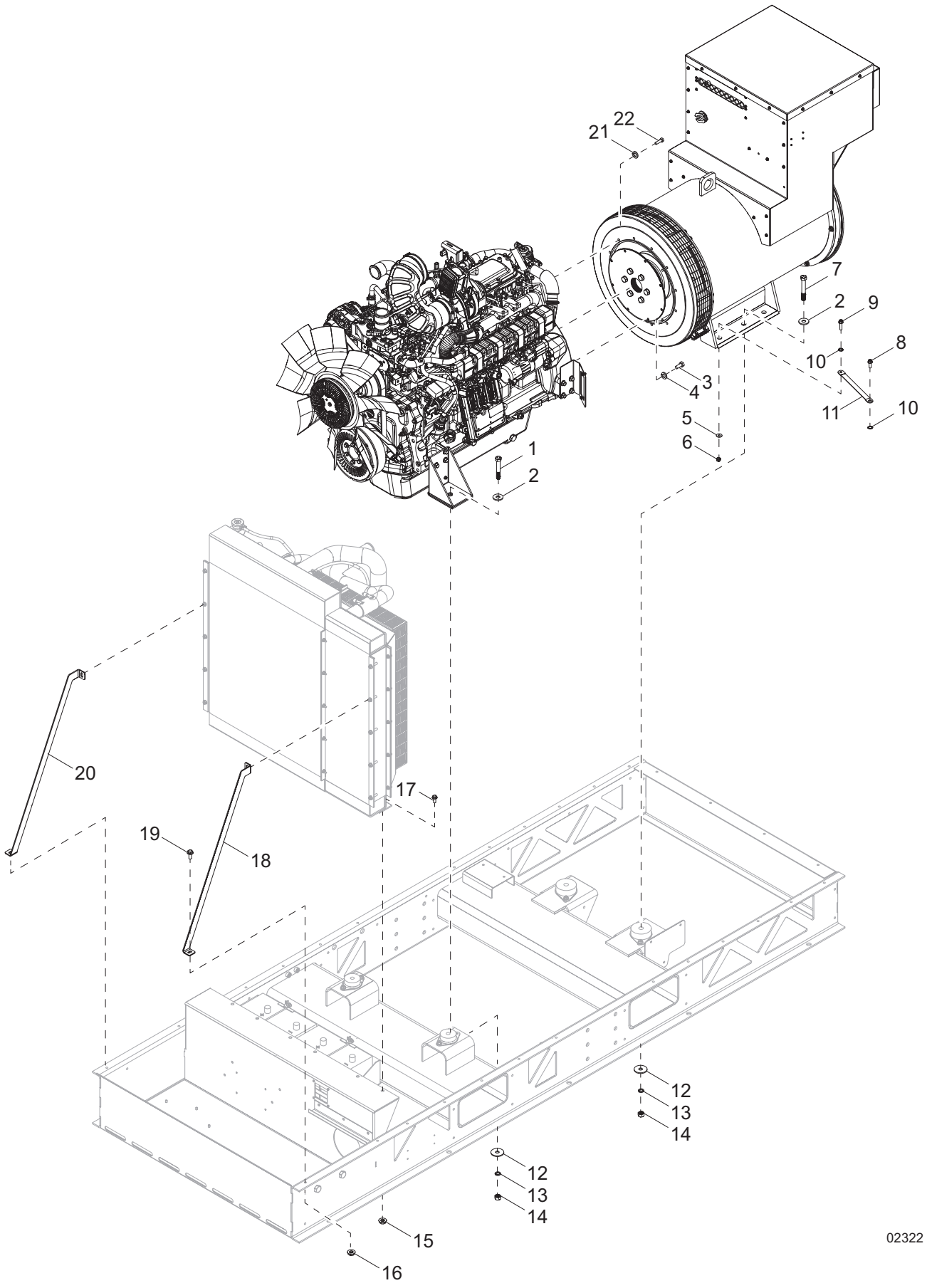
21
22
7
2
9
8
10
3
4
10
11
5
6
1
2
20
17
19
18
12
13
14
12
13
14
15
16
02322

Item	Part No.	Qty	Description	Notes
1	69924	2	Screw, .625-11 x 4.00 standard hex, G8	
2	60521	4	Washer, .625 flat 1.743/.108	
3	60717	8	Screw, .375-16 x .750 socket hex	
4	60206	8	Washer, .375 split lock	
5	60386	1	Washer, .375 flat .993/.064	
6	60145	1	Nut, 375-16 serrated flange hex, G5	
7	42775	2	Screw, .625-11 x 4.50 standard hex, G5	
8	60353	1	Screw, .375-16 x 1.00 flange hex, G2	
9	60487	1	Screw, .375-16 x 1.50 serrated flange hex, G5	
10	60369	2	Washer, M12 external star	
11	13083	1	Strap, braided ground - 10 in	
12	18086	4	Washer, .650 snub 2.250/.180	
13	60194	4	Washer, M16 split lock	
14	60520	4	Nut, .625-11 hex, G8	
15	60098	6	Nut, .500-13 serrated flange	
16	60095	2	Nut, .312-18 serrated flange	
17	61100	6	Screw, .500-13 x 1.00 serrated flange hex, G5	
18	10000011597	1	Support, STB roadside	
19	60516	2	Screw, .312-18 x 1.250 serrated flange hex	
20	10000011650	1	Support, STB curbside	
21	60026	12	Washer, M10 split lock	
22	60177	12	Screw, M10-1.50 x 30 standard hex, G10.9	

ENGINE BLOCK HEATER (IF EQUIPPED)

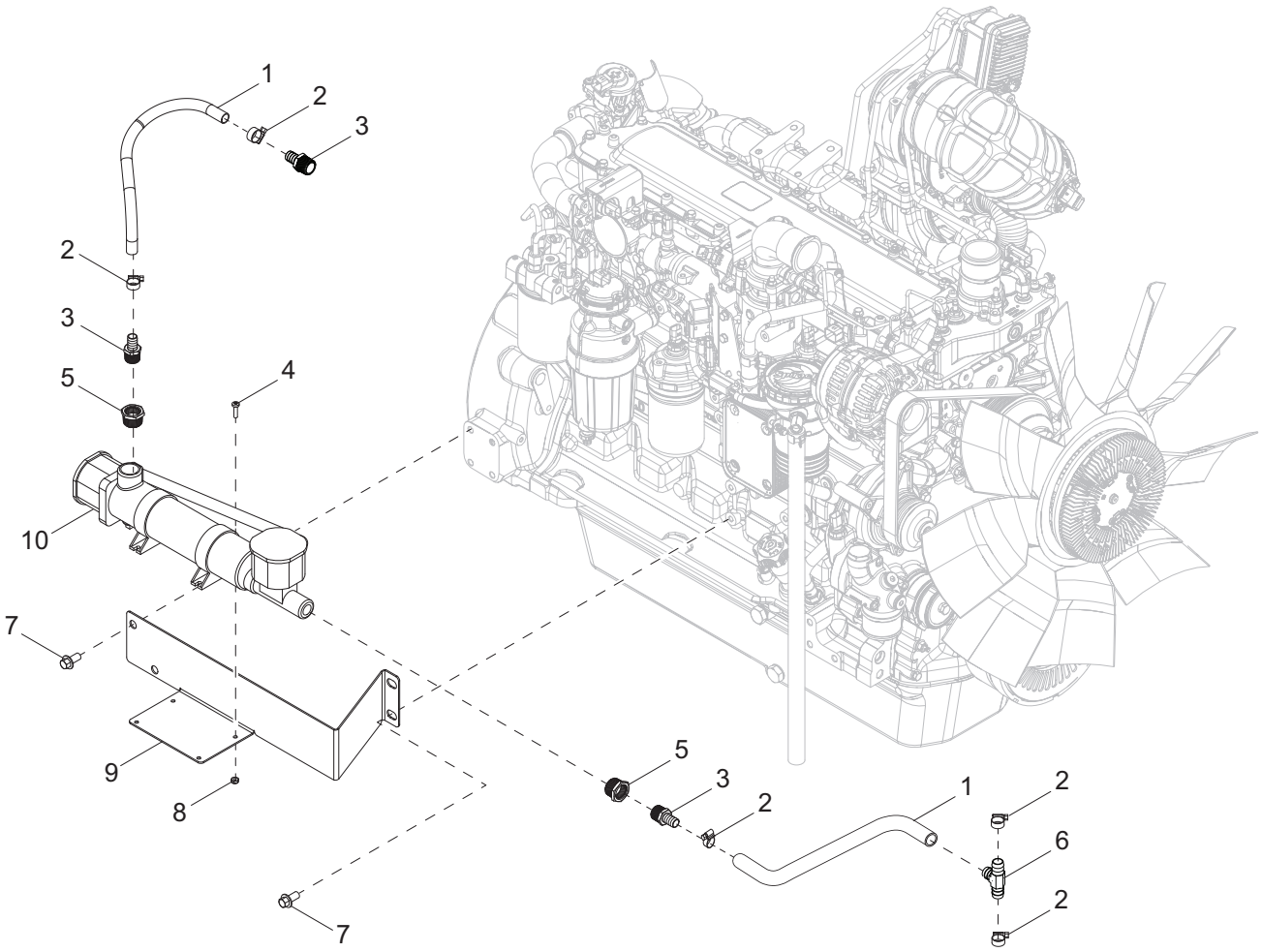

Item	Part No.	Qty	Description	Notes
1	50201	2	Hose, .625 Horizon 200PSI, class A	
2	19453	6	Clamp, hose - SAE 006 (.37 - .87)	
3	62076	3	Fitting, straight .750MNPT x .625 barb - brass	
4	60062	4	Screw, 10-32 x .750 pan Phillips, G2	
5	24006	2	Fitting, straight 1.00MNPT x .750FNPT	
6	0C9079D	1	Fitting, .375 tee, barbed - brass	
7	60072	4	Screw, M12-1.75 x 25 serrated flange hex, G10.9	
8	60415	4	Nut, 10-32 nylock - SS	
9	10000009261	1	Bracket, block heater	
10	28407	1	Heater, coolant 400-500CI, 120V 2500W	

ENGINE ASSEMBLY

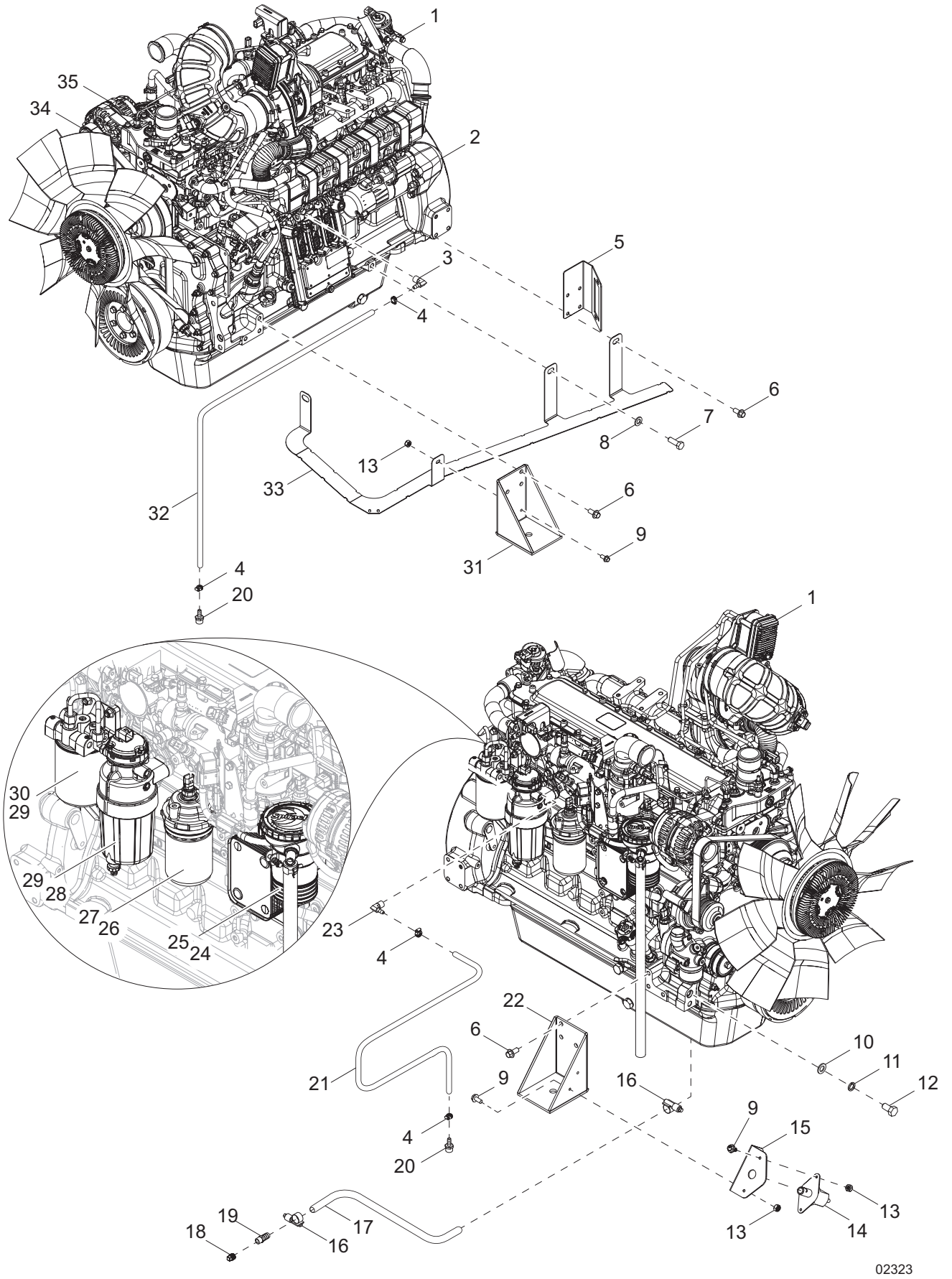

Item	Part No.	Qty	Description	Notes
1	51400	1	Engine, JD, 192 KW, 6068HFG05, tier 4F	
2	10000012633	1	Starter	
3	33413	1	Fitting, 90°, M12 x 1.50 x .375 barb	
4	14216	4	Clamp, hose SAE004 (.21-.62)	
5	54227B	1	Bracket, connector	
6	60072	12	Screw, M12-1.75 x 25 serrated flange hex, G10.9	
7	60499	1	Screw, M14-2.00 x 40 standard hex, G8.8	
8	39351	1	Washer, flat M14	
9	60107	5	Screw, .250-20 x .750 serrated flange hex, G5	
10	60193	1	Washer, M16 flat	
11	60194	1	Washer, M16 split lock	
12	44531	1	Screw, M16 - 2.00 x 30 standard hex, G8.8	
13	60161	5	Nut, .250-20 serrated flange, G5	
14	21489	1	Switch, battery disconnect - 500A	
15	54223B	1	Bracket, battery disconnect	
16	60365	2	Screw, M10-1.25 x 25 standard hex, G10.9	
17	50201	5.0 ft	Hose, .625 class A - 200PSI	
18	42683	1	Plug, .375 CL15 - square head	
19	25931	1	Fitting, straight - .375NPT x .625 barb	
20	23816	2	Fitting, straight .500MNPT x .375 barb - brass	
21	50051	6.0 ft	Hose, fuel .375 ID SAE30R7 - 50 PSI	
22	51761B	1	Mount, engine - right	
23	33414	1	Fitting, 90°, M14 x 1.50 x .375 barb	
24	10000012606	1	Cannister, OVR	
25	10000016857	1	Filter, OVR	
26	32245	1	Filter, oil	
27	10000018100	1	O-ring, oil filter	
28	10000018039	1	Filter, fuel - primary	
29	10000018052	1	Gasket Kit, fuel filter	
30	10000018016	1	Filter, fuel - secondary	
31	51762B	1	Mount, engine - left	
32	50051	6.0 ft	Hose, fuel .375 ID SAE30R7 - 50 PSI	
33	56370B	1	Support, hose and routing cables	
34	10000012588	1	Belt, fan	
35	33026	1	Alternator	

Note: *Engine parts used in all Generac Mobile Products, LLC equipment carry the Original Equipment Manufacturer (OEM) warranty unless otherwise stated. OEM warranty parts must be purchased through an OEM dealer. Please contact Generac Mobile Products, LLC with questions*

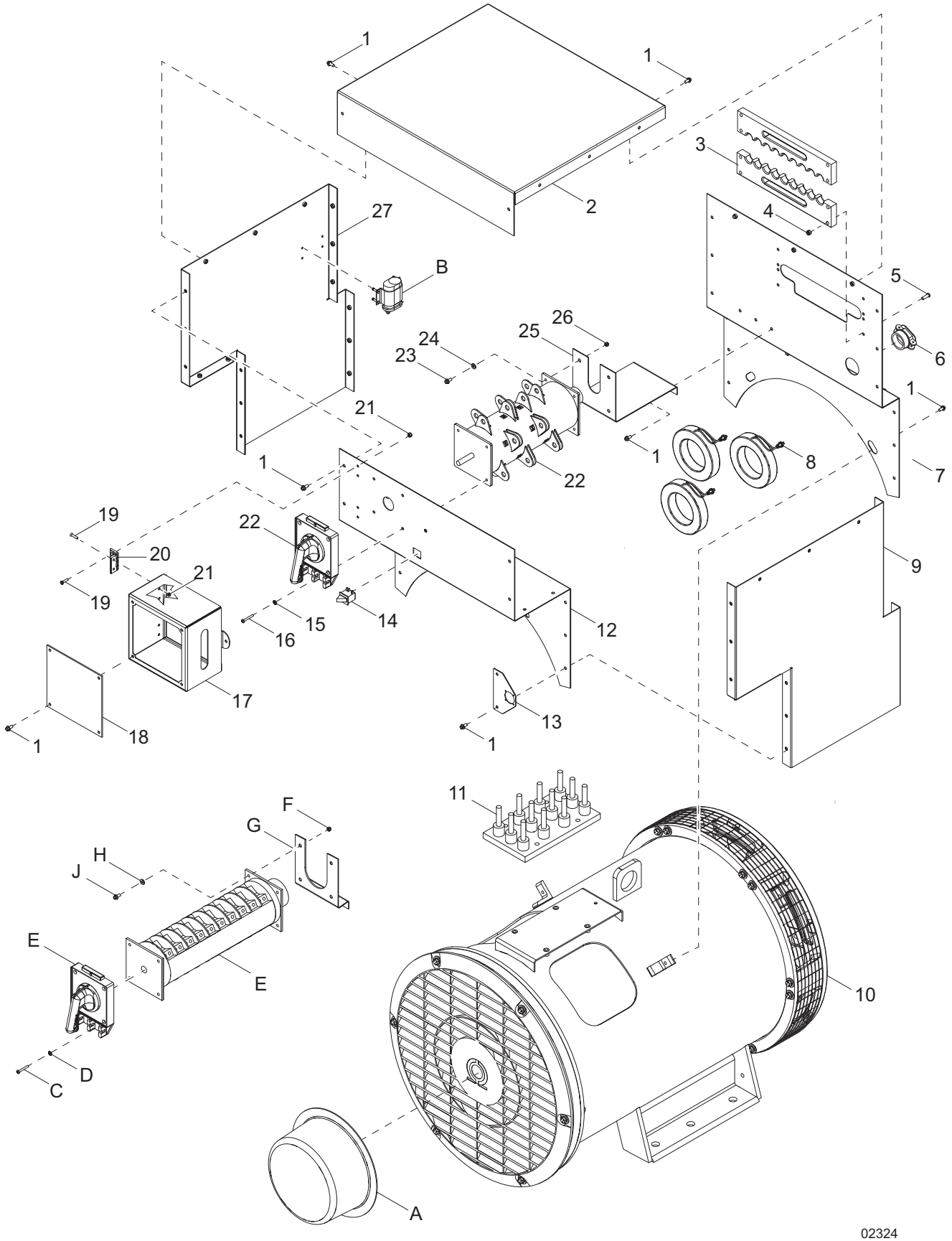
1
1
2
3
4
5
6
7
8
9
10
11
12
13
14
15
16
17
18
19
20
21
22
23
24
25
26
27
A
B
C
D
E
E
F
G
H
J
02324

Item	Part No.	Qty	Description	Notes
1	60175	40	Screw, .250-20 x .500 serrated flange hex, G5	
2	53981	1	Panel, top generator box	
3	56346	2	Plate, cable support	
4	60144	8	Nut, .250-20 nylock	
5	60518	8	Screw, .250-20 x 1.50 standard hex, G5	
6	65239	1	Strain relief, 1.50 Romex w/nut	
7	10000012380	1	Panel, generator box - front	
8	55009	3	XFMR current 800A w/o bracket	
9	10000012328	1	Panel, right-hand generator box	
10	51394	1	Generator, Marathon 432CSL6212	
11		1	Terminal Block	with generator
12	10000012362	1	Panel, rear generator box	
13	55051B	1	Mount, ECU connection	
14	12632	1	Switch, trigger safety, N.O. & N.C.	
15	60067	4	Washer, #10 flat .435/.060 - SS	
16	62046	4	Screw, 10-32 x 1.50 pan Phillips - SS	
17	55024B	1	Cover, phase selector	
18	55041	1	Lens, phase switch door	
19	73124	8	Screw, 10-24 x .875 flat head Phillips - SS	
20	35394	2	Hinge, door - small	
21	60530	8	Nut, 10-32 nylock - SS	
22	66337	1	Switch, PH-400A,3 position	
23	60167	4	Screw, M5-0.80 x 35 pan Phillips, G4.8	
24	60041	4	Washer, M5 flat	
25	54015B	1	Bracket, phase switch - 3 position	
26	60038	4	Nut, M5-.080 nylock, G6	
27	10000012359	1	Side panel, generator box	
CVS Kit (if equipped):				
A	22728	1	Kit, stator/rotor/CVS 430PSL	
B	65308	1	Capacitor, 7.5 uF, 370 VAC	
4 Position Phase Switch (if equipped):				
C	62046	4	Screw, 10-32 x 1.50 pan Phillips - SS	
D	60067	4	Washer, #10 flat .435/.060 - SS	
E	65799	1	Switch, Phase - 400A 4 position	
F	60038	4	Nut, M5-.080 nylock, G6	
G	54014B	1	Bracket, phase switch, 4 position	
H	60041	4	Washer, M5 flat	
J	60167	4	Screw, M5-0.80 x 35 pan Phillips, G4.8	

Note: *Generator parts used in all Generac Mobile Products, LLC equipment carry the Original Equipment Manufacturer (OEM) warranty unless otherwise stated. OEM warranty parts must be purchased through an OEM dealer. Please contact Generac Mobile Products, LLC with questions*

EXHAUST & AFTER TREATMENT ASSEMBLY

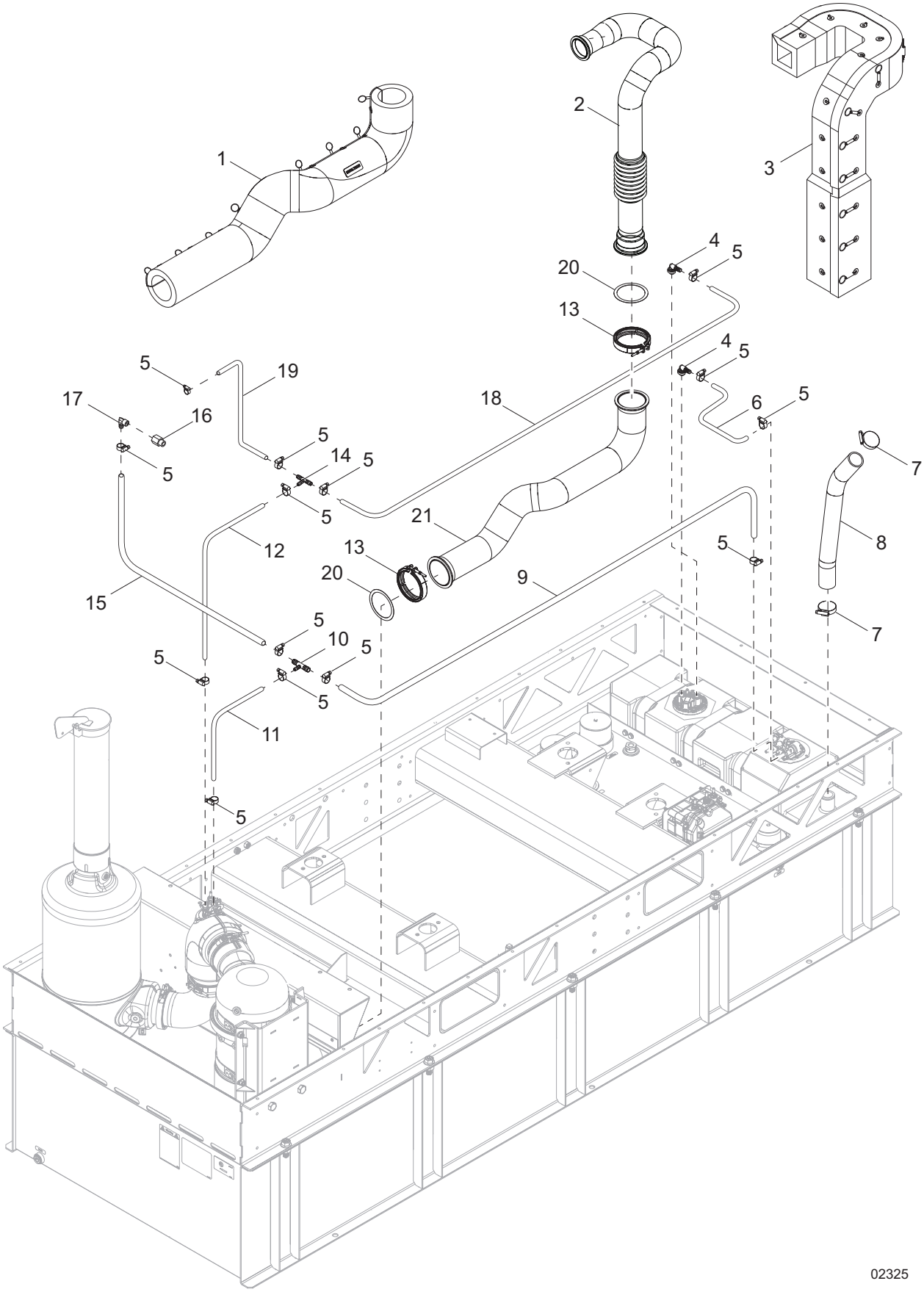

Item	Part No.	Qty	Description	Notes
1	54855	1	Blanket, lower exhaust	
2	55019	1	Pipe, exhaust - upper	
3	55020	1	Blanket, exhaust - upper	
4	55085	2	Fitting, 90° NG12 x .500 barb	
5	19453	16	Clamp, hose SAE006 (.37-.87)	
6	50206	2.83 ft	Hose, fuel .500ID 35PSI SAE30R7	To aux heater
7	60316	2	Clamp, hose SAE032 (1.56-2.50)	
8	54285	1	Hose, DEF fill	
9	50201	7.3	Hose, .625ID 200PSI	To coolant filter
10	76180	1	T-fitting, T317541	
11	50051	5.0 ft	Hose, fuel .375ID 50PSI SAE30R7	To dosing module
12	50051	5.0 ft	Hose, fuel .375ID 50PSI SAE30R7	
13	31861	2	Clamp, v-band 5.00 DPF	
14	76179	1	T-fitting, T296925	
15	50201	4.2 ft	Hose, .625ID 200PSI	To engine
16	19307	1	Fitting, strt .500FNPT x M22 x 1.50	
17	61014	1	Fitting, 90° .500MNPT x .625 barb - brass	
18	50206	9.0 ft	Hose, fuel .500ID 35PSI SAE30R7	To heater
19	50201	3.3 ft	Hose, .625ID 200PSI	To engine
20	33185	2	Gasket, 4.00 exhaust pipe flange	
21	54818	1	Weldment, lower exhaust	

Note: *DEF parts used in all Generac Mobile Products, LLC equipment carry the Original Equipment Manufacturer (OEM) warranty unless otherwise stated. OEM warranty parts must be purchased through an OEM dealer. Please contact Generac Mobile Products, LLC with questions*

EXHAUST & DEF ASSEMBLY

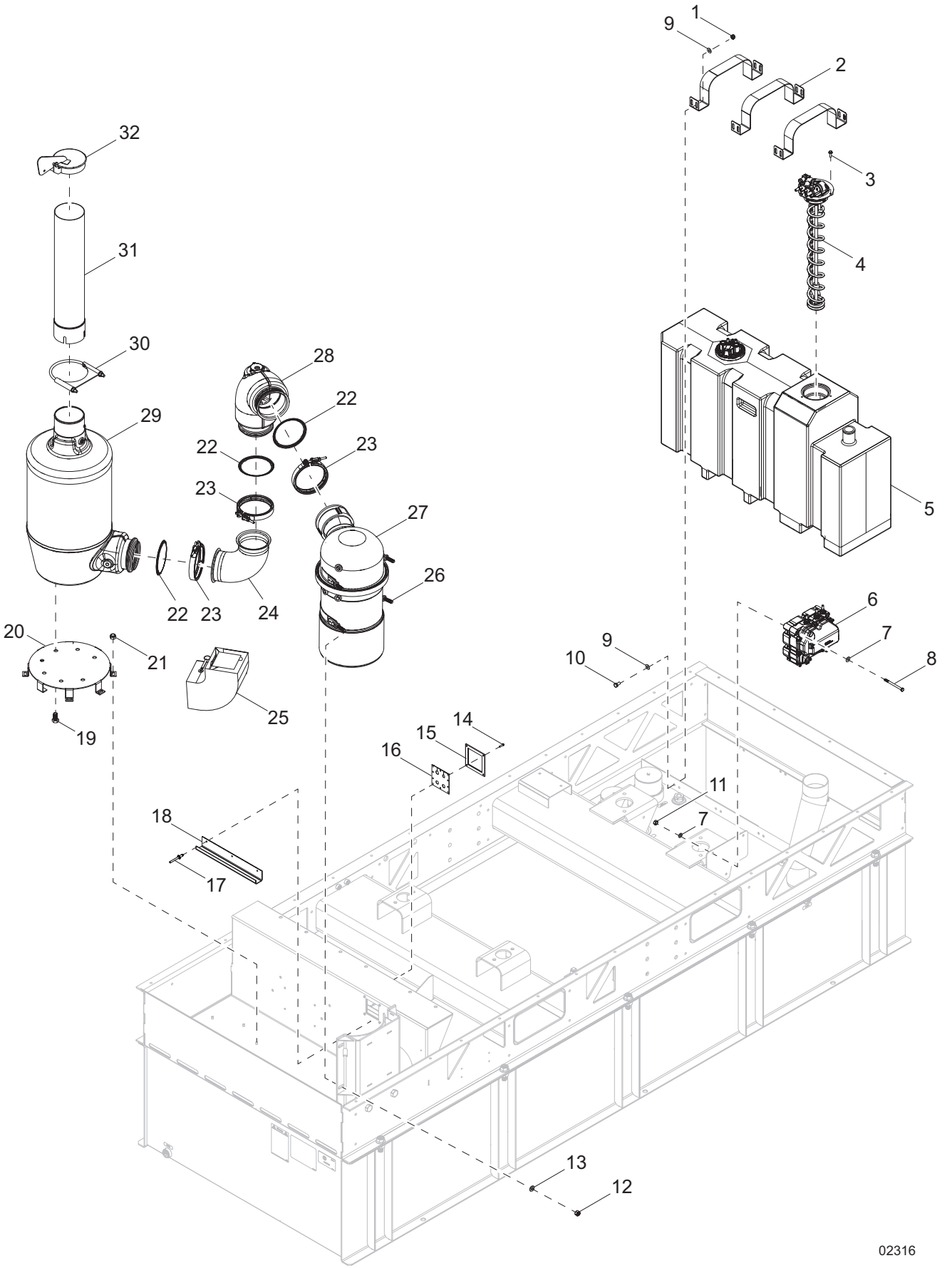

Item	Part No.	Qty	Description	Notes
1	60145	12	Nut, .375-16 serrated flange lock, G5	
2	56347B	3	Strap, DEF tank	
3	60115	3	Screw, M6-1.00 x 12 serrated flange hex, G8.8	
4	54234	1	Assembly, DEF header	
5	54021	1	Tank, DEF 25 gallon	
6	53490	1	Supply module	
7	60119	6	Washer, .312 flat .875/.070	
8	60404	3	Screw, .312-18 x 4.00 standard hex, G5	
9	60698	24	Washer, .375 flat .875/.040	
10	60295	12	Screw, .375-16 x .750 standard hex - SS	
11	60303	3	Nut, .312-18 nylock, G2	
12	60302	4	Screw, M10-1.25 x 60 serrated flange hex, G10.9	
13	60012	4	Washer, M12 flat	
14	61196	4	Screw, 10-23 x .750 standard hex - SS	
15	54926B	1	Clamp plate, bulkhead DEF	
16	51466	1	Bulkhead, DEF - rubber	
17	60268	3	Rivet, .188 dia x .126 to .250 grip	
18	54768B	1	Gutter, rear door rain	
19	44531	7	Screw, M16-2.00 x 30 standard hex, G8.8	
20	10000007665	1	Mount, SCR	
21	60095	6	Nut, .312-18 serrated flange	
22	33231	3	Gasket, 5.00 exhaust DPF flange	
23	10000011754	3	Clamp, V-band - Deere RE540348	
24	53684	1	Elbow, SCR	
25	54785	1	Blanket, insulated exhaust elbow	
26	54243	2	Strap, DOC - large	
27	53487	1	Module, DOC	
28	53787	1	Tube	
29	53488	1	Module, SCR	
30	27177	1	Clamp, muffler 5.00	
31	53683	1	Pipe, exhaust	
32	21096	1	Cap, rain 5.00 in	

Note: *DEF parts used in all Generac Mobile Products, LLC equipment carry the Original Equipment Manufacturer (OEM) warranty unless otherwise stated. OEM warranty parts must be purchased through an OEM dealer. Please contact Generac Mobile Products, LLC with questions*

SKID AND FUEL TANK ASSEMBLY

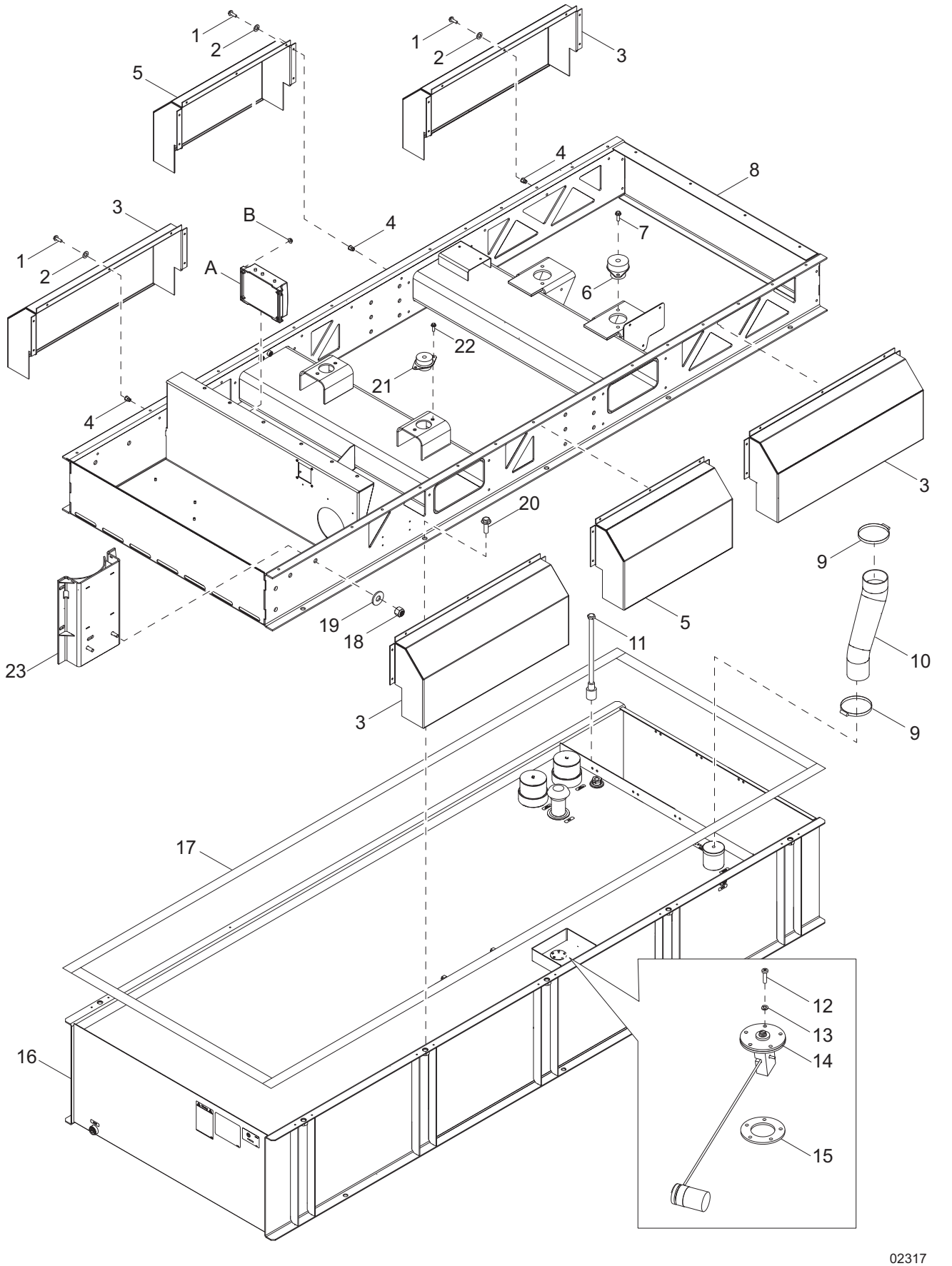

Item	Part No.	Qty	Description	Notes
1	68070	42	Screw, .250-20 x .1.0 button hex, SS	
2	60704	42	Washer, .250 split lock, SS	
3	54692B	4	Panel, rain guard - side	
4	56551	42	Insert, .250-20 splined .165-.260, threaded	
5	54695B	2	Panel, rain guard - mid-side	
6	53377	2	Isolator, rubber - 1500/1000	
7	60408	4	Screw, M10-1.50 x 30 standard hex, G8.8	
8	51764B	1	Weldment, mini skid	
9	19842	2	Clamp, hose - SAE072 (4.06-5.00)	
10	54008	1	Hose, fuel	
11	10000018699	1	Assembly, float switch	
12	60062	5	Screw, 10-32 x .750 pan Phillips, G2	
13	60252	5	Washer, #10 split lock	
14	21206	1	Sender, fuel 16-24 in, right-hand	
15	22323	1	Gasket, fuel sender	
16	52252B	1	Tank, fuel - 343 gal, double wall	
17	54922	1	Gasket, 1.00 x .250	
18	60240	2	Nut, .625-11 nylock, G5	
19	60521	2	Washer, .625 flat 1.743/.108	
20	63111	10	Screw, .750-10 x 2.25 flange hex, G8	
21	52671	2	Isolator, rubber - 680/1020	
22	62259	4	Screw, M10-1.50 x 30 serrated flange hex, G10.9	
23	54812BH	1	Weldment, DOC bracket	
Battery Charger (if equipped):				
A	66212	1	Charger, battery 2-5A/1-10A, 3 stage, 2 output	
B	61045	4	Nut, 10-32 serrated flange	

TRAILER ASSEMBLY

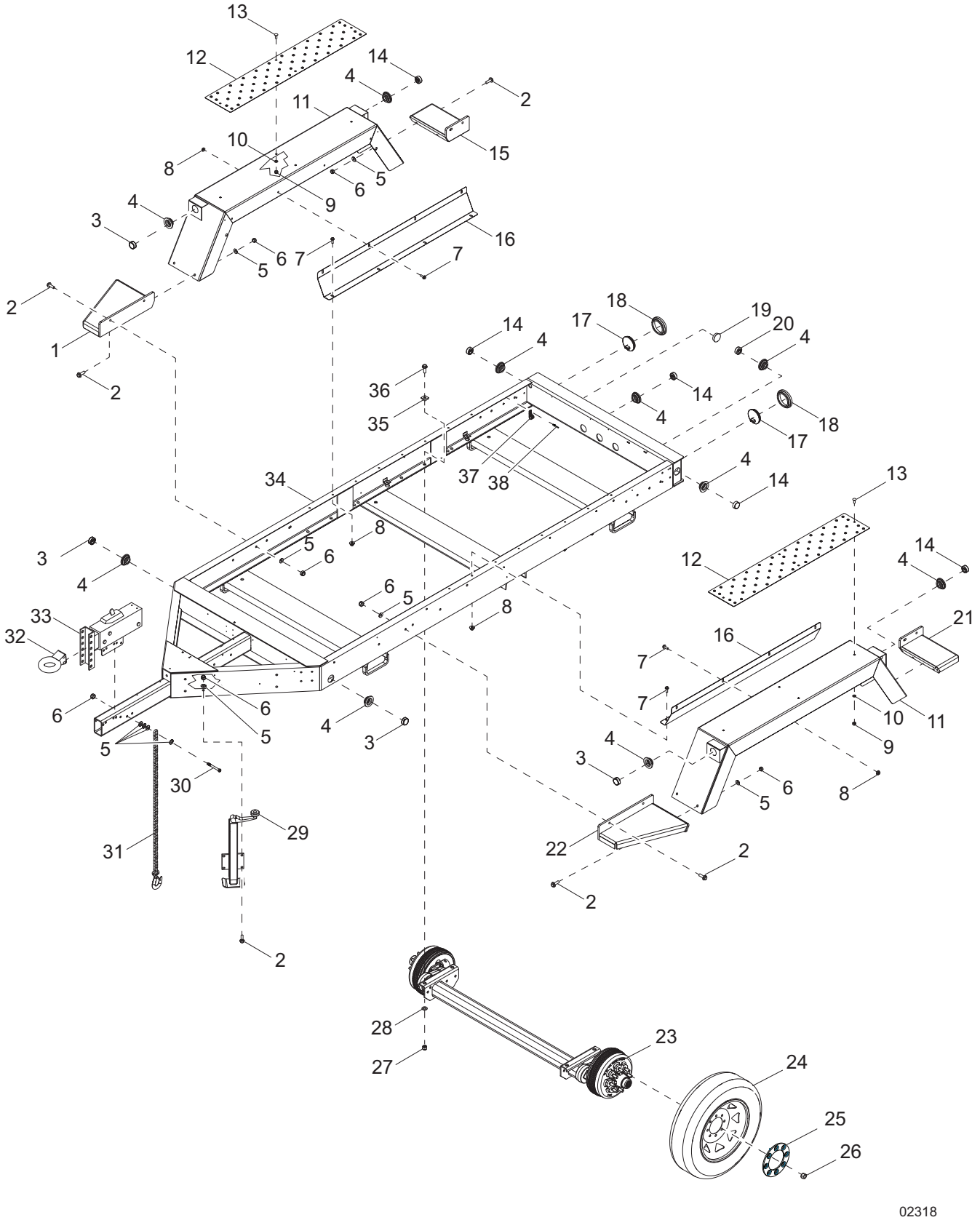

Item	Part No.	Qty	Description	Notes
1	22360B	1	Weldment, front step - right hand	
2	61103	20	Screw,500-13 x 1.75 serrated flange hex	
3	66702	4	Light, clearance 2.0” LED - amber	
4	66394	14	Grommet, sealed beam light 2.0” - rubber	
5	60416	28	Washer, .500 flat .375/.090	
6	62221	22	Nut, .500-13 nylock, G5	
7	60517	16	Screw, .375-16 x 1.00 serrated flange hex	
8	60145	16	Nut, .375-16 serrated flange, G5	
9	60358	8	Nut, .375-16 nylock, G5	
10	60698	8	Washer, .375 flat .875/.040 - SS	
11	54212B	2	Weldment, fender, large trailer	
12	54215B	2	Plate, anti-skid - diamond plate	
13	60790	8	Screw, .375-16 x 1.00 carriage - SS	
14	66703	7	Light clearance 2.0” LED - red	
15	22358B	1	Weldment, rear step - right hand	
16	22351B	2	Shield, fender - large trailer	
17	10221	2	Grommet, rear light 4.50” - rubber	
18	66701	2	Light, stop/tail/turn 4.0” LED	
19	62161	1	Plug, hole 2.25 diameter. - black	
20	66704	1	Light, utility 2.0” LED - clear	
21	22357B	1	Weldment, rear step - left hand	
22	22359B	1	Weldment, front step - left hand	
23	56488	2	Axle, 8000 lb. 57.0” frame hydraulic brakes	
24	24072B	4	Wheel, ST215/75R7.5 - black	
25	24101ZC	4	Ring, retaining	
26	61056	32	Nut, .625-18 lug 90º	
27	60240	8	Nut, .625-11 nylock, G5	
28	60193	8	Washer, M16 flat	
29	27318B	1	Weldment, jack - large trailer	
30	60376	2	Screw, 500-13 x 4.50 hex, G5	
31	20159	2	Chain, trailer safety - .375” hi test	
32	19335B	1	Coupler, lunette ring 3.0 ID - adjustable	
33	18373	1	Actuator, trailer	
34	27655B	1	Weldment, trailer frame	
35	60651	8	Washer, square bevel .626 gauge	
36	61078	8	Screw, .625-11 x 2.00 flange hex, G8	
37	16143	12	Clamp, tubing .500	
38	61155	12	Rivet, .188 diameter x .438-.750 grip	

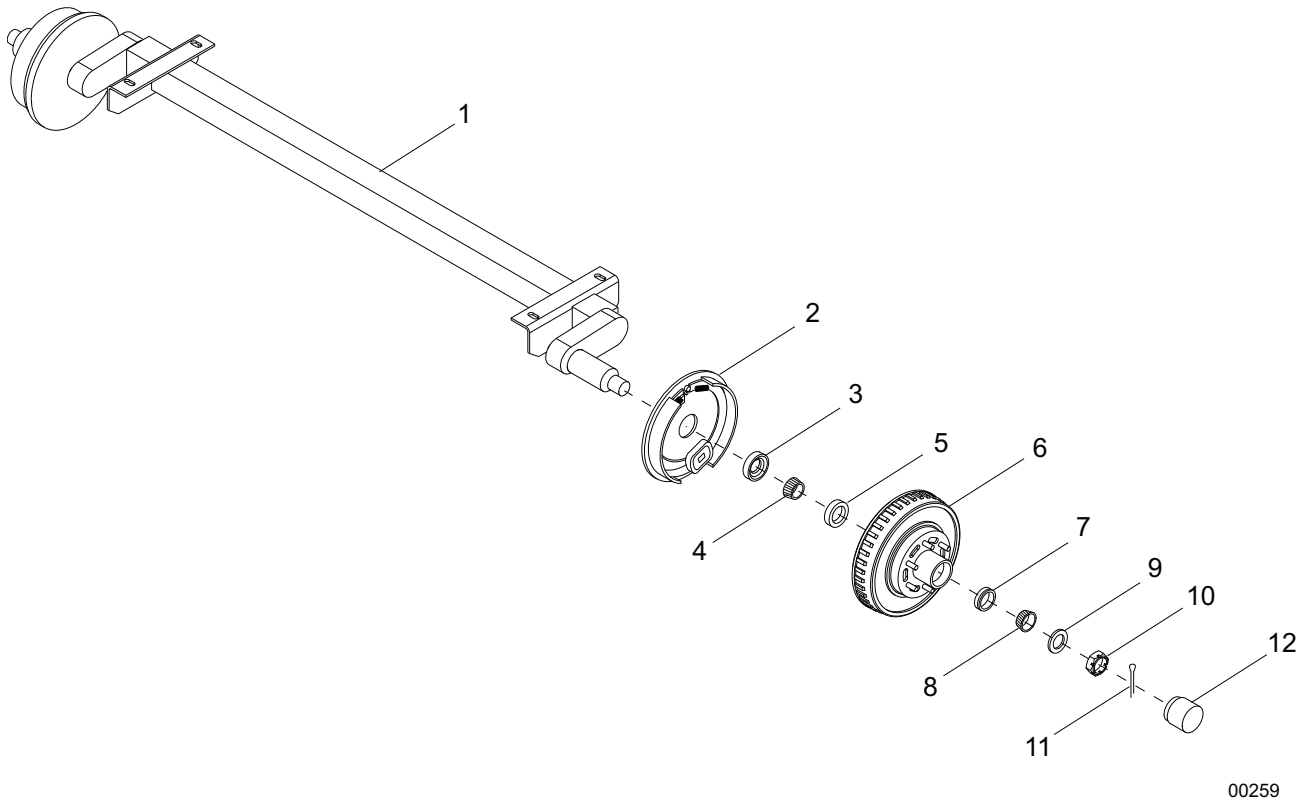
1
2
3
4
5
6
7
8
9
10
11
12
00259

Item	Part No.	Qty	Description	Notes
1	56488	1	Axle, 8000 lb. hydraulic	
2	10000015356	2	Brake shoe - left-hand, 8000 lb	
--	10000015359	2	Brake shoe - right-hand, 8000 lb	
3	10000015357	2	Seal - 8000 lb	
4	10000015367	2	Inner bearing cone - 8000 lb	
5	10000015378	2	Inner bearing cup - 8000 lb	
6	10000015319	2	Hub - 8000 lb	
7	10000015391	2	Outer bearing cup - 8000 lb	
8	10000015358	2	Outer bearing cone - 8000 lb	
9	10000015347	2	Spindle washer - 8000 lb	
10	10000015400	2	Spindle nut - 8000 lb	
11	10000019947	4	Cotter pin, 8000 lb	
12	26835	4	Grease cap, 8000 lb	

BRAKE LINE ASSEMBLY

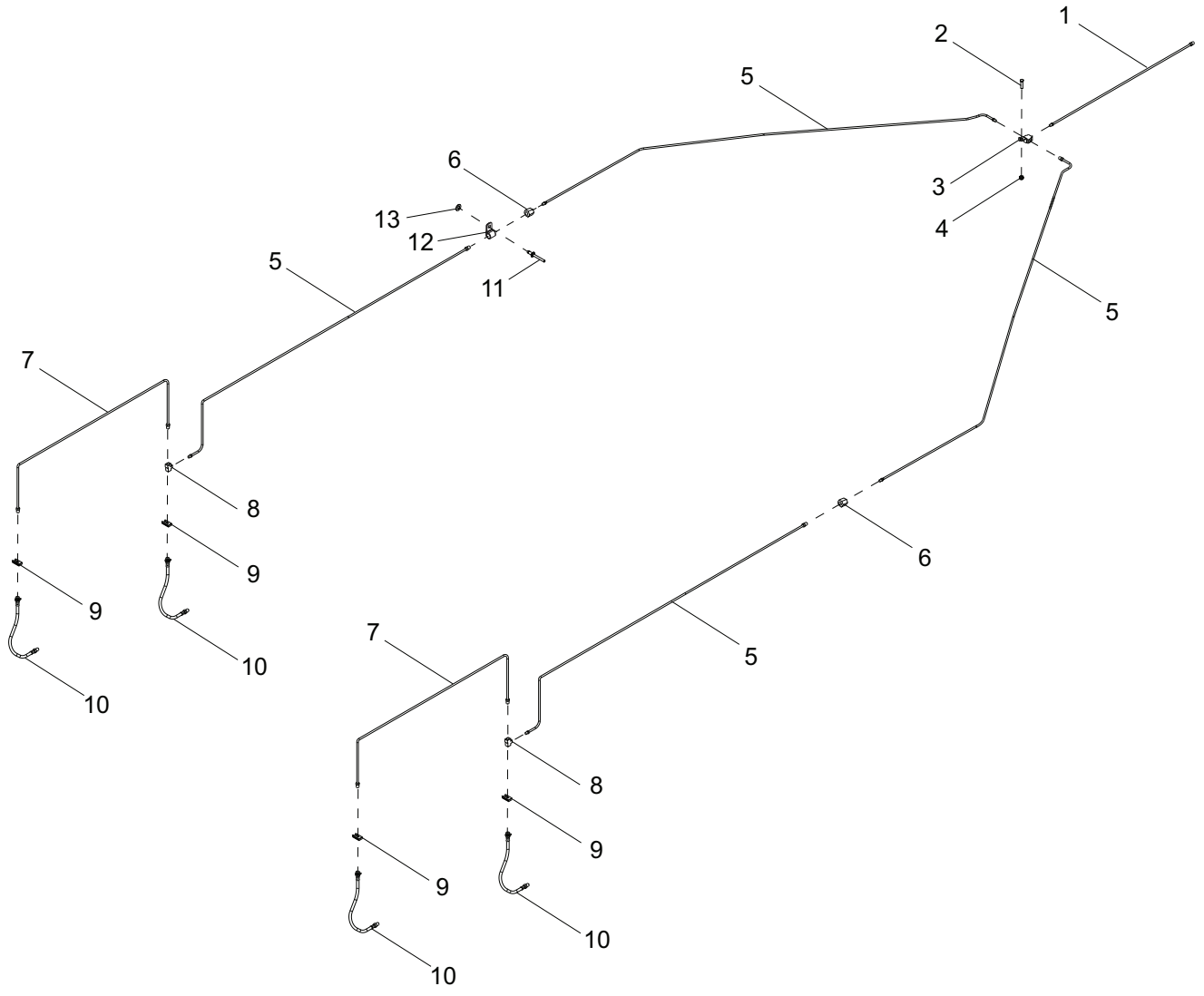

Item	Part No.	Qty	Description	Notes
1	40495	1	Line, brake - .188 x 20.0	
2	60684	1	Screw, .250-20 x .875 standard. hex, SS	
3	19252	1	Fitting, strt - .188 brake line T w/bracket - female	
4	60144	1	Nut, .250-20 nylock, G5	
5	22338	4	Line, brake - .188 x 60.0	
6	22339	2	Fitting, strt - .188 brake line coupler	
7	40493	2	Line, brake - .188 x 40.0	
8	40498	2	Fitting, strt - .188 brake line T - male/female/male	
9	40499	4	Clip, brake hose	
10	40497	4	Hose, brake - .188 x 20.0 - male/female	
11	60231	12	Rivet, .188 dia. x .375 to .500 grip	
12	61010	12	Clamp, tubing - .375 heavy-duty	
13	60237	12	Washer, #10 flat .495/.036	

RECOMMENDED SPARE PARTS - ENGINE AND SERVICE KITS

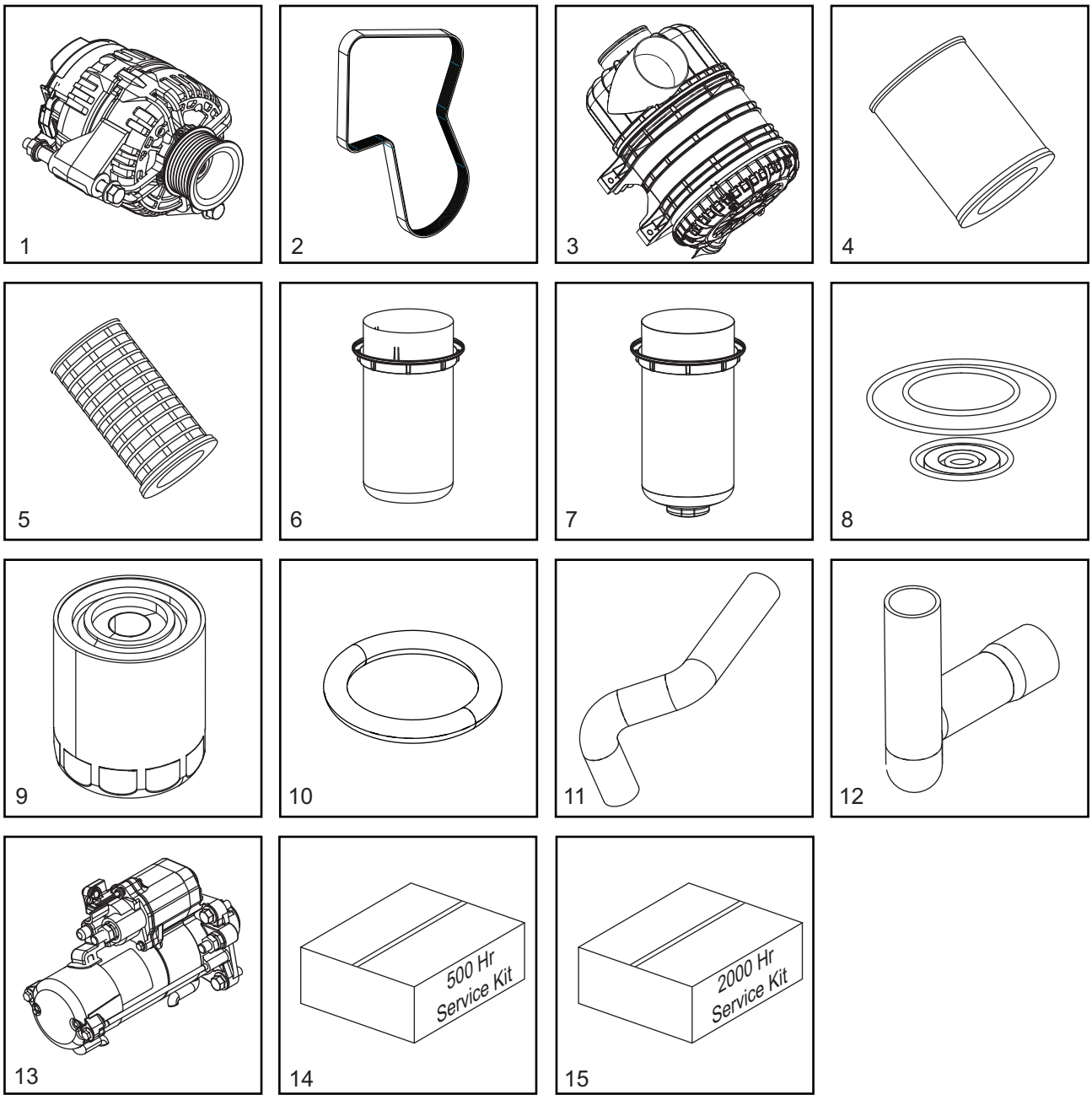

02391

ENGINE

1. Alternator 32910
2. Belt, fan 10000012588
3. Filter, air - housing assembly 54881
4. Filter, air - primary element 10000012604
5. Filter, air - secondary element 10000012613
6. Filter, fuel - primary 10000018039
7. Filter, fuel - secondary 10000018016
8. Filter, fuel - seal kit 10000018052
9. Filter, oil 32245
10. O-ring, oil filter 10000018100
11. Hose, radiator - lower 53628
12. Hose, radiator - upper 53627
13. Starter 10000012633

SERVICE KITS

14. 500 hour kit 10000017773

Includes: Primary Air Filter 1000012604, Secondary Air Filter 10000012613, Primary Fuel Filter Element 10000018039, Secondary Fuel Filter Element 10000018016, Fuel Filter Seal Kit 10000018052 (2), O-ring 10000018100 and Oil Filter 32245

15. 2000 hour kit 10000017792

Includes: Engine Belt 10000012588 (2), OVR Filter 10000016857, Primary Air Filter 1000012604 (4), Secondary Air Filter 10000012613 (4), Primary Fuel Filter Element 10000018039 (4), Secondary Fuel Filter Element 10000018016 (4), Fuel Filter Seal Kit 10000018052 (8), O-ring 10000018100 (4) and Oil Filter 32245 (4)

RECOMMENDED SPARE PARTS - ELECTRICAL AND TRAILER

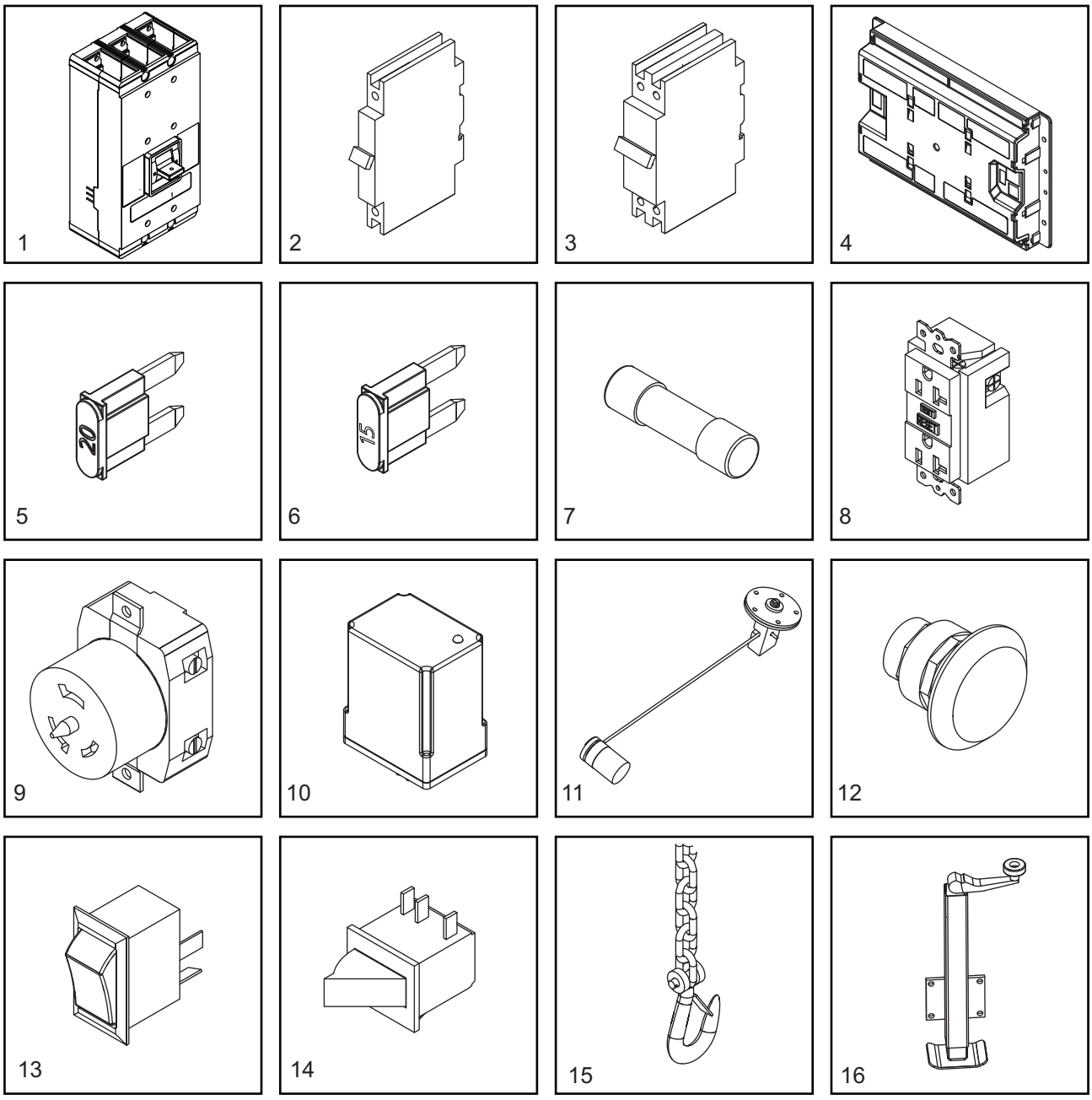

02390

ELECTRICAL

1.	Breaker, main	65354
2.	Breaker, 20A	18091
3.	Breaker 50A	18092
4.	Controller, programmed	Call
5.	Fuse, 20 A	35560
6.	Fuse, 15A	68204
7.	Fuse, 5A	073590A
8.	Receptacle, 120V/20A GFI	14130
9.	Receptacle, 240V/50A twist lock	18089
10.	Relay (Optional)	66340
11.	Sender, fuel	21206
12.	Switch, E-stop assembly	65470
13.	Switch, rocker	66996
14.	Switch, trigger safety	12632

TRAILER

15.	Chain, safety	20159
16.	Jack, top wind (tongue)	27318B

Note: *To order replacement controller, contact Generac Mobile Products with unit serial number*

This Page Intentionally Left Blank

Part No. 10000014956 Rev. C 03/14/2018

©2018 Generac Mobile Products, LLC
All rights reserved.
Specifications are subject to change without notice.
No reproduction allowed in any form without prior written consent from Generac Mobile Products, LLC.

Generac Mobile Products, LLC
215 Power Drive, Berlin, WI 54923
GeneracMobileProducts.com | 800-926-9768 | 920-361-4442